No. 17-

In the

Supreme Court of the United States

TOMITA TECHNOLOGIES USA, LLC AND TOMITA TECHNOLOGIES INTERNATIONAL, INC.

Petitioners,

v.

NINTENDO CO., LTD. AND NINTENDO OF AMERICA INC.

Respondents.

On Petition for a Writ of Certiorari to the United States Court of Appeals for the Federal Circuit

PETITION FOR A WRIT OF CERTIORARI

Kenneth L. Stein
Counsel of Record
Ian G. DiBernardo
Stroock & Stroock & Lavan LLP
180 Maiden Lane
New York, New York 10038
(212) 806-5400
kstein@stroock.com

Counsel for Petitioners

275057

COUNSEL PRESS

(800) 274-3321 • (800) 359-6859

QUESTIONS PRESENTED

35 U.S.C. § 112, ¶ 6 (now § 112(f)) and the Doctrine of Equivalents both involve similar tests for equivalence to determine patent infringement. In *Warner-Jenkinson Co. v. Hilton Davis Chem. Co.*, this Court provided governing principles for determining equivalence, including consideration of (i) the "known interchangeability" of the accused and claimed elements as an "important factor," and (ii) "the role played by each element in the context of the specific patent claim." 520 U.S. 17, 25, 36, 40 (1997). In this case, the Federal Circuit has disregarded those principles, (i) holding that a court need not consider evidence of "known interchangeability," and (ii) analyzing equivalence not in the context of the patent claim, but based on features in the accused product unrelated to the claimed invention. The questions presented are:

1. Whether the Federal Circuit erred in holding that there is no requirement that a court consider evidence in the record of known interchangeability when evaluating equivalence under 35 U.S.C. § 112, ¶ 6 (now § 112(f)) and the Doctrine of Equivalents in light of this Court's instruction that known interchangeability is an "important factor" in such a determination.

2. Whether the Federal Circuit erred in evaluating equivalence based on differences between the structures of an accused device and patented device whose sole significance relates to performing unclaimed functions.

RULE 29.6 STATEMENT

Tomita Technologies International, Inc. has no parent corporation. Tomita Technologies USA Management, LLC is a parent of Tomita Technologies USA, LLC. No publicly held company holds ten percent or more of the stock of Tomita Technologies USA, LLC or Tomita Technologies International, Inc.

TABLE OF CONTENTS

TABLE OF APPENDICES

TABLE OF CITED AUTHORITIES

Page

CASES

STATUTES AND OTHER AUTHORITIES

Tomita Technologies USA, LLC and Tomita Technologies International, Inc. (collectively, "Tomita") respectfully petition for a writ of certiorari to review the judgment of the United States Court of Appeals for the Federal Circuit in this case.

OPINIONS BELOW

The Federal Circuit opinion under appeal is reproduced at Petition Appendix (App.) 1a-17a and available at *Tomita Techs. USA, LLC v. Nintendo Co.*, 681 Fed. App'x 967 (Fed. Cir. 2017). The Federal Circuit's denial of Tomita's petition for rehearing en banc is unreported and reproduced at App. 18a-19a. The district court's Findings of Fact and Conclusions of Law, finding the asserted patent claim not infringed under 35 U.S.C. § 112, ¶ 6 and the Doctrine of Equivalents, is reproduced at App. 20a-39a and available at *Tomita Techs. USA, LLC v. Nintendo Co.*, 182 F. Supp. 3d 107 (S.D.N.Y. 2016). The Federal Circuit's prior opinion, remanding the case to the district court for consideration of infringement under a revised claim construction following a jury verdict of infringement and no invalidity, is reproduced at App. 40a-57a and available at *Tomita Techs. USA, LLC v. Nintendo Co.*, 594 Fed. App'x 657 (Fed. Cir. 2014). The district court's decision on post-trial motions, affirming the jury verdict of infringement and no invalidity, is reproduced at App. 58a-79a and available at *Tomita Techs. USA, LLC v. Nintendo Co.*, No. 1:11-cv-04256-JSR, 2013 WL 4101251 (S.D.N.Y. Aug. 14, 2013).

JURISDICTION

The Federal Circuit entered its judgment on March 17, 2017 (App. 1a) and denied a timely-filed petition for

rehearing en banc by order dated May 24, 2017 (App. 18a-19a). This Court has jurisdiction under 28 U.S.C. § 1254(1).

STATUTORY PROVISIONS INVOLVED

35 U.S.C. § 112, ¶ 6[1] provides:

> An element in a claim for a combination may be expressed as a means or step for performing a specified function without the recital of structure, material, or acts in support thereof, and such claim shall be construed to cover the corresponding structure, material, or acts described in the specification and equivalents thereof.

INTRODUCTION

This case involves an extraordinary refusal by the Federal Circuit to follow this Court's precedent regarding the test for equivalence under 35 U.S.C. § 112, ¶ 6 and the Doctrine of Equivalents. In *Warner-Jenkinson Co. v. Hilton Davis Chem. Co.*, this Court explained that the "*known interchangeability*" of an accused device's structure with the patented device's structure is an

1. 35 U.S.C. § 112 was amended and subsections renamed under the America Invents Act, Pub. L. No. 112-29 ("AIA"), which took effect on September 16, 2012. Because the application resulting in U.S. Patent No. 7,417,664 (the "'664 patent"), which is the patent at issue in this case, was filed before that date, the pre-AIA version of the statute applies and this petition refers to it. Section 112(f) of the AIA's version of the statute is identical to § 112, ¶ 6 of the pre-AIA version, except for the addition of a title.

"*important factor*" in determining whether the two structures are *equivalent*, and thus whether the accused device is infringing on a patent claim. 520 U.S. 17, 25, 36-37 (1997) (emphasis added). Yet, here, the Federal Circuit inexplicably disregards that precedent, instead holding that a court may ignore evidence regarding the important factor of "known interchangeability" because requiring a court to examine such evidence "*has no support in the law*." App. 15a. (emphasis added). Further, the Federal Circuit expressed an outright rejection of "known interchangeability" as an important factor, stating during its questioning at oral argument that known "[i]nterchangeability strikes me as one of the *less useful terms* that we use, of the various terms we use to try to explain what the essence of equivalence is." Oral Argument at 4:10, *Tomita Techs. USA*, 681 Fed. App'x 967 (No. 16-2015), *available at* http://oralarguments.cafc.uscourts.gov/default.aspx?fl=2016-2015.mp3 (hereinafter, "Oral Arg.") (emphasis added).[2]

When this Court identifies *known interchangeability* as an "*important factor*," the Federal Circuit is obligated to follow that instruction, not dismiss it. Contrary to the Federal Circuit's holding in this case, this Court plainly intends for lower courts to be required to examine evidence of known interchangeability when in the record. In this case, the district court had determined that the accused and patented structures were known to be interchangeable for performing the function recited in the claim, but did not properly consider that finding when

2. *See also id.* at 19:32 (The Federal Circuit explaining: "I'm going to take the known to be a given. So, when I use interchangeable, read known interchangeable.").

determining equivalence, as required by this Court. It was incumbent on the Federal Circuit to correct that error, not create a new rule that is irreconcilable with this Court's precedent.

In *Warner-Jenkinson*, this Court also explained that a bedrock principle in determining equivalence is "[a]n analysis of the role played by each element *in the context of the specific patent claim*." 520 U.S. at 40 (emphasis added). Likewise, 35 U.S.C. § 112, ¶ 6 expressly provides that the relevant structure is that described in the patent specification, *and equivalents*, for performing the "specified function" recited in the claim. Yet, in this case, the Federal Circuit affirmed a finding of no equivalence on the basis that the accused device is capable of performing a function that the Federal Circuit acknowledged is not recited in the claim—namely, certain adjustments to correct for *camera calibration* (*i.e.*, adjusting images to account for misplacement or misalignment, such as vertical or rotational misalignment, of the accused product's left and right cameras during manufacturing). To reach that conclusion, the Federal Circuit eviscerates the principle set forth by this Court. The Federal Circuit reasoned that, while the accused device's camera calibration function may not be relevant to equivalence, differences between the two devices identified by the district court that *result in* the accused device being able to perform that unclaimed and irrelevant camera calibration function (and no other) are nevertheless relevant and render the two devices non-equivalent. That logic can be applied to find no equivalence in basically every case in which the corresponding structure in an accused device performs unclaimed functions not performed by the patented device. It is irreconcilable with this Court's precedent and should not be permitted to stand.

This case also demonstrates a failure by the Federal Circuit to perform a task expressly assigned to it by this Court. Twenty years ago, this Court directed the Federal Circuit to refine the test for equivalence based on the governing principles it set forth *Warner-Jenkinson*. Those principles included consideration of (i) the *known interchangeability* of the accused and claimed elements as an *important factor*, and (ii) "[a]n analysis of the role played by each element in the context of the specific patent claim." *Warner-Jenkinson*, 520 U.S. at 40. Since that time, the Federal Circuit has not refined the test for equivalence, but instead different panels have applied one or both of the two then-existing tests—the function-way-result ("triple identity") test and the "insubstantial differences" test—unchanged and without any rationale for its decision to apply a given test in any particular instance. This Court recognized that both of those tests have problems, which the Federal Circuit was supposed to address based on this Court's guidance, but the Federal Circuit has not done so.

The Federal Circuit has (1) failed to follow the governing principles set forth by this Court in *Warner-Jenkinson*, (2) failed to refine the test for equivalence as instructed by this Court, and (3) rendered irreconcilable opinions regarding the test for equivalence, making it impossible for the patent bar and both patentees and their competitors to understand with any degree of certainty when equivalence applies. Tomita respectfully submits that this Court should review these very important issues.

STATEMENT OF THE CASE

I. LEGAL BACKGROUND

In patent law, the test for equivalence arises in two contexts—(i) 35 U.S.C. § 112, ¶ 6, and (ii) the Doctrine of Equivalents. The first, 35 U.S.C. § 112, ¶ 6, is a statutory provision—first appearing in the Patent Act of 1952 as § 112, ¶ 3—that provides that a patentee may claim an element of an invention by the function it performs, rather than reciting its specific structure. In particular, pursuant to § 112, ¶ 6, "[a]n element in a claim for a combination *may be expressed as a means or step for* performing a specified function without the recital of structure, material, or acts in support thereof." § 112, ¶ 6 (emphasis added). This is commonly referred to as means- or step-plus-function claiming. When a patentee expresses a claim in these terms so as to invoke § 112, ¶ 6, "such claim shall be construed to cover the corresponding structure, material, or acts described in the specification *and equivalents thereof*." *Id.* (emphasis added); *see also Warner-Jenkinson*, 520 U.S. at 27-28 (addressing § 112, ¶ 6). To literally infringe a means-plus-function claim limitation, the accused structure must perform the recited function and have a structure that is the same as or equivalent to the structure disclosed in the patent for performing that function. *Caterpillar Inc. v. Deere & Co.*, 224 F.3d 1374, 1379 (Fed. Cir. 2000).

Means-plus-function claims have been widely used, and recently, the Federal Circuit greatly expanded the reach of § 112, ¶ 6 in its en banc decision in *Williamson v. Citrix Online, LLC*, 792 F.3d 1339 (Fed. Cir. 2015). Prior to *Williamson*, there was a "strong" presumption that

§ 112, ¶ 6 did not apply unless the patentee used the word "means" in the claim. *See Williamson*, 792 F.3d at 1348-49. The *Williamson* decision lowered the presumption flowing from the lack of the word "means" from a "strong" one to simply a presumption (*id.*), vastly increasing the number of patents subject to § 112, ¶ 6 and, concomitantly, the importance of the test for equivalence.

The Doctrine of Equivalents, in contrast, is a judge-made doctrine that reaches back more than 150 years. *See Graver Tank & Mfg. Co, v. Linde Air Prod. Co.*, 339 U.S. 605, 608 (1950) ("Originating almost a century ago in the case of *Winans* v. *Denmead,* 15 How. 330, 14 L.Ed. 717, it has been consistently applied by this Court and the lower federal courts, and continues today ready and available for utilization when the proper circumstances for its application arise."); *Warner-Jenkinson*, 520 U.S. at 26, n.3. As this Court has explained, the basis for the Doctrine of Equivalence "grow[s] out of a legally implied term in each patent claim that 'the claim extends to the thing patented, however its form or proportions may be varied.'" *Warner-Jenkinson*, 520 U.S. at 34-35 (citing *Winans v. Denmead*, 15 How. 330, 343 (1854)). On that basis, "application of the doctrine of equivalents involves determining whether a particular accused product or process infringes upon the patent claim, where the claim takes the form—half express, half implied—of 'X and its equivalents.'" *Id.* at 35.

The equivalence determination for literal infringement under § 112, ¶ 6 and the equivalence determination under the Doctrine of Equivalents are "closely related" and involve "similar analyses of insubstantiality of differences." *Caterpillar*, 224 F.3d at 1379. The tests

for each are essentially the same—except that literal infringement under § 112, ¶ 6 requires that the accused structure perform the *same function* as the patented structure, whereas, under the Doctrine Equivalence, the structures need only perform *substantially the same function*. *See Interactive Pictures Corp. v. Infinite Pictures, Inc.*, 274 F.3d 1371, 1381-82 (Fed. Cir. 2001). The "essential inquiry" of the equivalence analysis is whether "the accused product or process contain[s] elements identical or equivalent to each claimed element of the patented invention." *Warner-Jenkinson*, 520 U.S. at 40.

This Court last addressed the test for equivalence in *Warner-Jenkinson*. There, it recognized problems with the two tests routinely applied to determine equivalence—(i) the function-way-result ("triple identity") test, which "focus[es] on the *function* served by a particular claim element, the *way* that element serves that function, and the *result* thus obtained by that element," and (ii) the "insubstantial differences" test (*id.* at 39 (emphasis in original)):

> There seems to be substantial agreement that, while the *triple identity test* may be suitable for analyzing mechanical devices, *it often provides a poor framework for analyzing other products or processes*. On the other hand, the *insubstantial differences test* offers little additional guidance as to what might render any given difference "insubstantial."

Id. at 39-40 (emphasis added). Rather than specifying a particular formulation for the test that would address those problems, this Court provided certain governing

principles. The Court first identified as an "*important factor*" the "*known interchangeability*" of the accused device's structure with the patent device's structure. *Id.* at 25, 36-37 (emphasis added). The Court also provided certain "limiting principles":

> "Does the accused product or process contain elements identical or equivalent to each claimed element of the patented invention?"
>
> "A focus on individual elements and a special vigilance against allowing the concept of equivalence to eliminate completely any such elements …."
>
> "*An analysis of the role played by each element in the context of the specific patent claim* will thus inform the inquiry as to whether a substitute element matches the function, way, and result of the claimed element, or whether the substitute element plays a role substantially different from the claimed element."

Id. at 40 (emphasis added).

Based on those principles, this Court left it to the Federal Circuit to "refine the formulation of the test for equivalence in the orderly course of case-by-case determinations":

> With these limiting principles as a backdrop, we see no purpose in going further and micromanaging the Federal Circuit's particular word choice for analyzing equivalence. We

> expect that the Federal Circuit will refine the formulation of the test for equivalence in the orderly course of case-by-case determinations, and we leave such refinement to that court's sound judgment in this area of its special expertise.

Id. at 40. However, since then, the Federal Circuit has not refined the test for equivalence.

Instead, the Federal Circuit has continued to apply one or both of the function-way-result test and insubstantial differences test unchanged. As explained below, the Federal Circuit has not only failed to refine the test, but now how taken a step backwards, casting aside the governing principles set forth by this Court in *Warner-Jenkinson*.

II. PROCEEDINGS BELOW

A. The Invention

This case concerns important image technology developed by Mr. Seijiro Tomita—an accomplished engineer and inventor, who, prior to inventing the technology covered by the '664 patent, worked at Sony for nearly 30 years as a scientist and manager, and served as General Manager for Future Sony Business Development, where he reported directly to Sony's CEO.

Tomita's '664 patent addresses an important issue relating to the capture and display of 3D (stereoscopic) images—in particular, how to optimally display 3D images when the conditions present when a 3D image is captured,

such as the size of the image when captured, are different from the conditions present when the image is displayed, by adjusting the horizontal offset between left- and right-eye images. App. 3a, 22a. The '664 patent accomplishes this by storing "cross-point information" along with the captured left and right images comprising the stereoscopic image. App. 42a. It then uses that cross-point information and information regarding the size of the image when displayed to adjust the offset between the left and right images to provide an optimal stereoscopic feeling. App. 3a-4a, 22a, 24a.

Claim 1 is the only claim at issue and, specifically, the phrase "offset presetting means …" in that claim:

> 1. A stereoscopic video image pick-up and display system comprising:
>
> a stereoscopic video image pick-up device including two video image pick-up means for outputting video information from said pick-up means;
>
> a stereoscopic video image display device for displaying different video images for the eyes of a viewer; and
>
> medium for transmitting video image information from said stereoscopic video image pick-up device to said stereoscopic video image display device,
>
> in which said stereoscopic video image pick-up device includes cross-point measuring

> means for measuring CP information on the cross-point (CP) of optical axes of said pick-up means and outputs information including the CP information and video image information to said medium; and
>
> in which said stereoscopic video image display device includes *offset presetting means for offsetting and displaying said different video images based upon said video image information, said cross-point information and information on the size of the image which is displayed by said stereoscopic video image display device.*

App. 3a-4a (emphasis added).

B. Lower Court Proceedings

On June 22, 2011, Tomita filed suit against Nintendo Co., Ltd. and Nintendo of America, Inc. (collectively, "Nintendo") for infringement of the '664 patent. See App. 2a. Specifically, Tomita accused the Nintendo 3DS and its 3DS Camera and AR Games features of infringement. App. 42a-43a.

1. First (Jury) Trial and Appeal

A jury trial was held, and, on March 13, 2013, the jury returned a verdict in Tomita's favor of infringement and no invalidity, and awarded damages of $30.2M (later reduced to $15.1M on remittitur). App. 58a-59a, 79a. Nintendo moved for JMOL, which the court denied, and then filed an appeal to the Federal Circuit.

In that appeal, the Federal Circuit affirmed all the determinations supporting the verdict of infringement and no invalidity, and the denial of JMOL, except for one—a portion of the district court's construction under § 112, ¶ 6 of the "offset presetting means" limitation (and the finding that the accused 3DS performed it). App. 41a, 50a-52a. In construing a means-plus-function limitation under § 112, ¶ 6, a court first construes the function and then identifies the structure in the patent's specification that performs that function. In this case, the Federal Circuit did not disturb the district court's construction of the function of that limitation. App. 9a. It held, however, that the district court erred in its construction of the corresponding structure. In particular, the Federal Circuit explained that the "offset presetting means" performs two functions, "[i] offsetting and [ii] displaying," and identified particular components in the patent that performed each. App. 48a, 50a. The Federal Circuit then remanded the case to the district court for consideration of infringement—and thus equivalents—under the revised claim construction. App. 41a, 51a-52a.

2. Second (Bench) Trial and Appeal

A bench trial was held on the remanded issue, at which Tomita presented testimony and evidence that the 3DS's structure for performing the function of the offset presetting means was equivalent to the corresponding structure in the '664 patent under the "insubstantial differences" test and the important "known interchangeability" factor. App. 35a. In particular, as determined by the district court in the earlier proceedings, the claimed function is "offsetting and displaying said different video images based upon said video image information, said cross-point

information and information on the size of the image which is displayed by said stereoscopic video image display device." App. 22a. The '664 patent uses "relative timing" (implemented in hardware) to offset the left- and right-eye images by a desired amount that is based on cross-point information and screen-size information. App. 24a-25a. The 3DS uses "matrix transformations" (implemented in software) to perform that function. App. 31a. The matrix transformations can perform several operations simultaneously—shifting (offsetting) an image horizontally, shifting an image vertically, rotating an image and scaling (resizing) an image. App. 26a. The only transformation that is relevant to the claimed function in this case is shifting an image horizontally. App. 10a ("[T]he disputed limitation offsets certain images only by adding a single value along the horizontal axis."); App. 21a-22a, 26a. In the 3DS, the other transformations (*e.g.*, shifting vertically) are used to correct images based on camera calibration information. *See* App. 31a-32a; App. 36a-37a.

Following trial, the district court ruled that the 3DS lacks equivalent structure (both under § 112, ¶ 6 and the doctrine of equivalents) and, therefore, does not infringe. App. 38a. With respect to the "offsetting" portion of the function, the district court found, based on extensive evidence presented at trial, including prior art patents and technical manuals, (i) that the structures in the '664 patent and 3DS—namely, "relative timing" (implemented in hardware) in the '664 patent and "matrix transformations" (implemented in software) in the 3DS—were both "known" prior to the issuance of the '664 patent for creating horizontal offsets (or translations) for stereoscopic images (*i.e.*, the claimed offsetting), as called for by the patented invention and

(ii) that the 3DS's structure could be used in place of the '664 patent's structure (which is the essence of known interchangeability). App. 35a ("The Court does find that using relative timing and using matrix transformations to accomplish image offsets were both known to the art prior to the issuance of the '664 patent."; Both techniques "known to accomplish horizontal translations used to create stereoscopic images"); App. 26a ("The relative timing offsets effected by the '664 patent could also be accomplished using an affine transformation matrix" used in the 3DS). The court, however, dismissed the significance of those findings of known interchangeability by applying a legal standard acknowledged to be erroneous by the Federal Circuit on appeal. App. 35a-36a (emphasis added).

In terms of specific differences, the district court relied on the 3DS's ability to perform a separate and independent function—corrections for camera calibration—at the same time it performs the claimed offsetting function. App. 36a-37a (noting that the "more flexible software-based transformation matrices in the 3DS" can "effect other affine transformations," such as vertical translations, in addition to the horizontal translation that is described and claimed in the '664 patent); App. 31a-32a; App. 36a-37a (concluding that "[a] person of ordinary skill in the art would consider these differences to add something of significance to the '664 patent's offsetting structure, including *because they allow the 3DS to correct for camera calibration*") (emphasis added). In so doing, the court, at Nintendo's urging, flipped the equivalence analysis on its head: rather than evaluating equivalence in the context of the invention, the court, by focusing on the irrelevant camera calibration feature, evaluated equivalence in the context of the accused device. App. 36a ("[T]he hardware-

based timing mechanism of the '664 patent cannot provide the same functionality as the more flexible software-based transformation matrices in the 3DS.").[3] The 3DS's camera calibration feature, however, has nothing to do with the claimed offsetting function, and, accordingly, is irrelevant to equivalency.[4]

Tomita appealed that decision to the Federal Circuit, and the Federal Circuit affirmed, despite identifying several significant errors in the district court's decision, including the following two errors:

First, the Federal Circuit acknowledged that the legal standard for equivalence stated by the district court—namely, that "if two structures known to perform the same function *accomplish it significantly differently*,

---

3. In connection with its function-way-result analysis, the district court also noted that "implementing adjustments in software [as in the 3DS] rather than hardware [as in the '664 patent] provides more flexibility, because software can be updated and the GPU performs other functions *related to gaming*." App. 32a (emphasis added); *see also* App. 10a. But "gaming" relates only to the 3DS and not the claimed function or the '664 patent's universally applicable improvement to stereoscopic imagery.

4. As to the "displaying" portion of the function, the district court also found that the corresponding structures in the accused Nintendo 3DS and the '664 patent were not equivalent. Tomita also appealed that finding on several grounds. However, since the Federal Circuit relied solely on the "offsetting" portion of the function in its decision, and did not consider those arguments, we do not raise them here. *See* App. 16a-17a (Federal Circuit stating that it "need not" address Tomita's challenges to the district court's findings regarding the displaying structures because it affirmed the no equivalence finding regarding the offsetting structures).

they are *not interchangeable*"—was erroneous. *See* App. 15a (quoting App. 34a-35a) (emphasis added). The Federal Circuit, however, dismissed that error, stating that "[w]e will not find legal error based upon an isolated statement stripped from its context," referring to the district court's entire analysis under the insubstantial differences test. *Id.* To the contrary, that error was not an "isolated statement"—the district court in fact expressly incorporated every difference under its function-way-result analysis into its insubstantial differences, stating that "[t]he differences between the '664 patent and the 3DS discussed above [*in connection with the function-way-result test*] are also relevant to the insubstantial differences inquiry" (App. 35a), and specifically repeated those same points in its insubstantial differences inquiry (*see* App. 35a-38a).

Of particular relevance here, Tomita argued to the Federal Circuit that the district court erred in its equivalence analysis by ignoring its own finding that the accused product and patented device were known to be interchangeable for performing the claimed function. The Federal Circuit disagreed, stating that "[t]o the extent that Tomita suggests that the District Court was *required* to examine evidence on known interchangeability, *that position has no support in the law*." App. 15a (second emphasis added) (internal citations omitted). In fact, during oral argument, the panel, through its questioning, expressed extreme skepticism of known interchangeability, stating "[i]nterchangeability strikes me as one of the less useful terms that we use, of the various terms we use to try to explain what the essence of equivalence is." Oral Arg. at 4:10; *see also id.* at 19:32 (The court explaining: "I'm going to take the known to

be a given. So, when I use interchangeable, read known interchangeable.”).

Second, with respect to the district court’s conclusion that “[a] person of ordinary skill in the art would consider these differences [in the 3DS’s structure] to add something of significance to the ‘664 patent’s offsetting structure, including because they *allow the 3DS to correct for camera calibration*” (App. 37a (emphasis added)), the Federal Circuit acknowledged that correction for camera calibration is an unclaimed function (App. 14a). It nevertheless dismissed its significance, explaining: “Even if the District Court improperly considered camera calibration, it nonetheless found that the structure that performs offsetting in the 3DS is substantially different from the structure in the disputed limitation.” App. 14a. However, those “differences” in structure were only relevant to the 3DS’s ability to perform the camera calibration function (an unclaimed function). As to the claimed *offsetting* function, the district court had found that the accused and patented structures were known to be interchangeable. The district court specifically mentioned “camera calibration,” *and no other feature*, in concluding its substantial differences analysis. App. 37a. And the Federal Circuit (like the district court) did not identify any reason those “differences” (such as affecting “several different transformations at the same time” and changing the location of pixels along a “vertical [axis] of a grid”) would be significant other than to perform the irrelevant function of correcting for camera calibration. App. 12a-14a.

The Federal Circuit also acknowledged that the district court failed to evaluate equivalence for the

3DS's mode of operation in which images are displayed from an SD card (App. 14a), which is required under its precedent holding that a product that infringes a patent only part of the time, or in certain modes of operation, is still infringing. *Broadcom Corp. v. Emulex Corp.,* 732 F.3d 1325, 1333 (Fed. Cir. 2013). In that mode, when the 3DS performs the claimed offsetting function, it does not perform corrections for camera calibration—which, again, is the feature the district court relied upon in finding no equivalence in other modes. App. 36a-37a; App. 12a-14a. Despite that failure, the Federal Circuit asserted that "that does not change the fact that the District Court found several other substantial differences," citing the district court's *entire* discussion of the insubstantial differences test, without (because it could not) identifying a single one of them that is relevant to the SD Card mode. App. 14a (citing App. 34a-38a). Having identified *no* difference applicable to SD Card mode, it is impossible to reasonably conclude that the district court would have found no equivalence for that mode if it had considered it, as required.

Tomita then petitioned the Federal Circuit for rehearing en banc, which raised the above points and further argued that the Federal Circuit erred by failing to remand the case in view of numerous legal errors the Federal Circuit identified in the district court's decision. The Federal Circuit denied Tomita's petition for rehearing en banc without explanation. App. 18a-19a.

REASONS FOR GRANTING THE PETITION

I. THE FEDERAL CIRCUIT'S HOLDING THAT "KNOWN INTERCHANGEABILITY" NEED NOT BE EXAMINED WHEN DETERMINING EQUIVALENCE IS IRRECONCILABLE WITH THIS COURT'S PRECEDENT.

The Federal Circuit in this case relied upon an erroneous legal premise: "To the extent that Tomita suggests that the District Court was *required* to examine evidence on known interchangeability, *that position has no support in the law*." App. 15a (second emphasis added) (internal citations omitted). That proposition is contrary to this Court's precedent and flat-out wrong. In *Warner-Jenkinson*, this Court held that *known interchangeability* is an "*important factor*" to consider in determining equivalence and that "[t]he *known interchangeability* of substitutes for an element of a patent is *one of the express objective factors* noted in *Graver Tank* bearing on whether the accused device is substantially the same as the patented invention." 520 U.S. at 25, 36 (emphasis added); *see also id.* at 25 ("An *important factor* is whether persons reasonably skilled in the art would have known of the interchangeability of an ingredient not contained in the patent with one that was.") (quoting *Graver Tank*, 339 U.S. at 609) (emphasis added).

Moreover, in *Warner-Jenkinson*, this Court repeatedly stressed the importance of *known interchangeability*. It was not one among many "*important*" factors, but was the *only* factor it identified as such. *Id.* at 25 (emphasis added). And notably, this Court repeatedly relied upon *known interchangeability* to ground its analysis and conclusions

in *Warner-Jenkinson*. For example, this Court relied on *known interchangeability* to explain its conclusion that equivalence is *objective* in nature, not an equitable defense based on the alleged infringer's behavior, despite seemingly contrary language in *Graver Tank*:

> But another explanation is available that does not require a divergence from generally *objective principles* of patent infringement. In both instances in *Graver Tank* where we referred to independent research or experiments, we were discussing the *known interchangeability* between the chemical compound claimed in the patent and the compound substituted by the alleged infringer. The need for independent experimentation thus could reflect knowledge—or lack thereof—of *interchangeability* possessed by one presumably skilled in the art. *The known interchangeability of substitutes for an element of a patent is one of the express objective factors noted by Graver Tank as bearing upon whether the accused device is substantially the same as the patented invention.* Independent experimentation by the alleged infringer would not always reflect upon the objective question whether a person skilled in the art would have *known of the interchangeability* between two elements, but in many cases it would likely be probative of such knowledge.

Id. at 36 (emphasis added).

Further, in rejecting the argument that the Doctrine of Equivalents should be limited to only equivalents known at the time the patent issued, this Court once again relied exclusively on the principle of *known interchangeability*:

> [W]ith regard to the objective nature of the doctrine, a skilled practitioner's *knowledge of the interchangeability* between claimed and accused elements is not relevant for its own sake, but rather for what it tells the factfinder about the similarities or differences between those elements. Much as the perspective of the hypothetical "reasonable person" gives content to concepts such as "negligent" behavior, the perspective of a skilled practitioner provides content to, and limits on, the concept of "equivalence." Insofar as the question under the doctrine of equivalents is whether an accused element is equivalent to a claimed element, the proper time for evaluating equivalency—*and thus knowledge of interchangeability between elements*—is at the time of infringement, not at the time the patent was issued.

Id. at 37 (emphasis added).

The Supreme Court has relied upon *known interchangeability* as a measure of equivalence for over one hundred years. *See, e.g., Morley Sewing Mach. Co. v. Lancaster*, 129 U.S. 263, 290 (1889) ("In this sense the mechanical devices used by the defendant are *known substitutes or equivalents* for those employed in the Morley machine to effect the same result, and *this is the proper meaning of the term 'known equivalent.'*")

(emphasis added); *Gill v. Wells,* 89 U.S. 1, 28 (1874) ("By *an equivalent* in such a case it is meant that the ingredient substituted for the one withdrawn performs the same function as the other, and that it was *well known* at the date of the patent securing the invention as *a proper substitute* for the one omitted in the patented combination.") (emphasis added); *Gould v. Rees*, 82 U.S. 187, 194 (1872) (test for equivalence must consider whether "the ingredient substituted performs the same function as the one omitted and was *well known* at the date of his patent *as a proper substitute* for the one omitted") (emphasis added).

Based on this Court's precedent, there can be no doubt that evidence of known interchangeability in the record *must be* examined when determining equivalence. The Federal Circuit cannot cast it aside. Nor is it proper for the Federal Circuit to question the importance of such evidence, as it has done here. *See* Oral Arg. at 4:10 (the Federal Circuit expressing great skepticism of "known interchangeability" as an important factor, stating during its questioning at oral argument that known "[i] nterchangeability strikes me as one of the *less useful terms* that we use, of the various terms we use to try to explain what the essence of equivalence is") (emphasis added); *see also id.* at 19:32 (The court explaining: "I'm going to take the known to be a given. So, when I use interchangeable, read known interchangeable.")

"Known Interchangeability" Has Great Practical Significance and Provides Much-Needed Objectivity to Equivalency Determinations

Unlike the function-way-result test, which this Court has recognized as providing a "poor framework" for analyzing non-mechanical devices, and the insubstantial differences test, which this Court recognized may offer "little additional guidance" (*Warner-Jenkinson*, 520 U.S. at 39-40), *known interchangeability* is a factual inquiry based on objective, verifiable considerations—namely, was the structure used in the accused product a known substitute for the structure used in the patent for performing the claimed function (*id.* at 36-37). Indeed, the evidence of known interchangeability in this case consisted of prior art patents and technical manuals, as explained below. Thus, known interchangeability provides a sorely needed factual predicate for an equivalence determination. In contrast, for example, the function-way-result test frequently boils down to the *ipse dixit* of competing experts. While the two sides' experts may agree regarding the *function* of the accused and patented structures, the *way* each operates, and the respective *results* of those operations, the accused infringer's expert will invariably conclude that any difference in the *way* is substantial, while the patentee's expert will conclude it is not. By what measure then is a lay judge or jury to evaluate such competing testimony from potentially credible, well-credential experts? And how can competitors fairly gauge the scope of a patent and the risk of infringement? That is why *known interchangeability* provides an objective touchstone for the finder of fact and is an important factor in determining equivalence—it can serve to ground

such competing testimony and concerns about potential infringement in objective, pre-litigation facts.

In the present case, the result of the Federal Circuit ignoring this Court's precedent is particularly egregious. The district court had found, based on extensive evidence presented at trial, including prior art patents and technical manuals, (i) that the structures in the patent and accused product were "both known to accomplish horizontal translations used to create stereoscopic images" (*i.e.*, the claimed offsetting), and (ii) that the 3DS's structure could be used in place of the '664 patent's structure. App. 35a; *see also* App. 26a ("The relative timing offsets effected by the '664 patent could also be accomplished using an affine transformation matrix" used in the 3DS). In other words, the district court found substantial evidence of known interchangeability. The district court, however, ignored those findings, applying a legally erroneous standard—namely, that "if two structures known to perform the same function *accomplish it significantly differently*, they are *not interchangeable*." App. 35a-36a (emphasis added). The Federal Circuit acknowledged that the district court's standard was legally erroneous, but swept it under the rug by holding that the district court was not required to consider evidence of known interchangeability in the first place. App. 15a-16a. Again, that directly contradicts this Court's precedent.

Tomita submits that this Court should correct the Federal Circuit's error and affirmatively state, consistent with its instructions in *Graver Tank* and *Warner-Jenkinson*, that a finder of fact *is required* to examine evidence of the known interchangeability of the accused and patented structures when determining equivalence.

II. THE FEDERAL CIRCUIT'S RELIANCE ON FEATURES IN THE ACCUSED PRODUCT THAT ARE UNRELATED TO THE CLAIMED FUNCTION IS IRRECONCILABLE WITH THIS COURT'S PRECEDENT.

In *Graver Tank*, this Court explained that equivalence must be determined against the "*context of the patent*" and emphasized that consideration "must be given to the purpose for which an ingredient is used in a patent" and "the function which it is intended to perform":

> What constitutes equivalency must be determined against *the context of the patent, the prior art, and the particular circumstances of the case*. Equivalence, in the patent law, is not the prisoner of a formula and is not an absolute to be considered in a vacuum. It does not require complete identity for every purpose and in every respect. In determining equivalents, things equal to the same thing may not be equal to each other and, by the same token, things for most purposes different may sometimes be equivalents. *Consideration must be given to the purpose for which an ingredient is used in a patent*, the qualities it has when combined with the other ingredients, and *the function which it is intended to perform*. An important factor is whether persons reasonably skilled in the art would have known of the interchangeability of an ingredient not contained in the patent with one that was.

Graver Tank, 339 U.S. at 609 (emphasis added); *see also Warner Jenkinson*, 520 U.S. at 24-25 (quoting above

passage). As later emphasized by this Court in *Warner-Jenkinson*, "[a]n analysis of the role played by each element *in the context of the specific patent claim* will thus inform" the equivalence analysis. 520 U.S. at 40 (emphasis added). Thus, features and benefits provided by an accused product that are unrelated to the claimed function are not relevant to an equivalence analysis.

In this case, however, the Federal Circuit has—without ever considering this Court's precedent—created a loophole that vitiates that fundamental principle, holding instead that differences between the accused and patented structures that "*result* in" the accused device being able to perform an unclaimed function are, in themselves, grounds for finding the two not equivalent (App. 13a (emphasis in original)), even where the *sole* significance of those differences relates to an unclaimed function. That loophole flips equivalence analysis on its head by asking whether the patented structure can be substituted for the accused structure in the accused device (including performing unclaimed functions performed by the accused device), rather than whether the accused structure can be substituted for the patented structure in the patented device. As one example, despite the '664 patent providing a universal improvement to 3D imagery, the Federal Circuit acknowledged the district court's distinction that "[the 3DS's] implementing adjustments in software rather than hardware [as in the '664 patent] provides more flexibility, because software can be updated and the GPU performs other functions related to gaming." App.9a-10a (brackets in original omitted). In other words, here, the Federal Circuit has approved evaluating equivalence in the context of the accused device, rather than the patent.

The Federal Circuit justified this departure from precedent by stating that "evaluating whether the accused product possesses something of significance that is not found" in the patented structure is "precisely what the [court] was required to assess," with a remarkable citation to *Gemstar-TV Guide Int'l, Inc. v. Int'l Trade Comm'n*, 383 F.3d 1352, 1363 (Fed. Cir. 2004). App. 11a. But in so doing, it ignored the principle, enunciated by this Court, that it is "the role played by each element in the context of the specific patent claim" that is paramount. *Warner-Jenkinson*, 520 U.S. at 40. A difference, though significant in the context of the accused device's performing a function other than the claimed function, is not relevant to equivalence of that claimed element. *Id.* at 24-25 ("[Equivalency] does not require complete identity for every purpose and in every respect.... *Consideration must be given to the purpose for which an ingredient is used in a patent*, the qualities it has when combined with the other ingredients, and *the function which it is intended to perform*.") (emphasis added).

The sole support the Federal Circuit provided for applying its erroneous new principle is an isolated, ambiguous statement in its own *Gemstar* decision, in which the court found no equivalence where the accused system "relied on a different technology that could produce results unattainable by" the patented structure. App. 11a (quoting *Gemstar*, 383 F.3d at 1363). But *Gemstar* is devoid of details regarding the equivalence analysis because "the operation of [the] accused device [was] subject to a protective order." *Gemstar*, 383 F.3d at 1363, n.3. In any event, *Gemstar* cannot be a basis for disregarding this Court's precedent.

In the present case, the result of the Federal Circuit ignoring this Court's precedent is, once again, egregious. Here, all the differences between the accused and patented structures relied upon by the district court in finding no equivalence with respect to its insubstantial differences analysis related to the 3DS's *camera calibration* feature, which is never discussed in, and completely unrelated to, the '664 patent. *See* App. 37a (concluding that the 3DS's structure has differences that "add something of significance to the '664 patent's offsetting structure, including because they allow the 3DS *to correct for camera calibration*") (emphasis added). The Federal Circuit acknowledged that *correction for camera calibration* is an unclaimed function, but ignored the significance of it being so, explaining:

> Although the District Court found that these differences *result* in significant additions to the 3DS, like camera calibration, that does not mean that the District Court equated the results of the substantial differences with the differences themselves. *Even if the District Court improperly considered camera calibration*, it nonetheless found that the structure that performs offsetting in the 3DS is substantially different from the structure in the disputed limitation.

App. 13a-14a (first emphasis in original, second emphasis added). Neither the district court nor the Federal Circuit attributed any significance to the differences in the 3DS's structure identified by the district court other than to perform the unrelated *correction for camera calibration* function. *See* App. 37a, 12a-14a. The upshot is that, under

the rule applied by the Federal Circuit in this case, any difference between the patented and accused structures that results in the accused product being able to perform an unclaimed function may be deemed grounds for finding the two not equivalent, even where (i) the *sole* significance of the differences relates to the *unclaimed function*, and (ii) the structures of the accused product and patented device were known to be interchangeable for performing *the claimed function*. That rule is irreconcilable with this Court's decisions in *Graver Tank* and *Warner-Jenkinson*.

Indeed, this case itself illustrates the absurd implications of the Federal Circuit's new rule. Here, the district court failed to evaluate equivalence for the 3DS's mode of operation in which images are displayed from an SD card and *no correction for camera calibration is made when performing the claimed offsetting function*. The Federal Circuit dismissed that failure, explaining that even if "the District Court evaluated equivalence only for one 3DS mode of operation, that does not change the fact that the District Court *found several other substantial differences* between the '664 patent and the 3DS." App. 14a (emphasis added). Those "other substantial differences," however, all relate to the irrelevant camera calibration feature. Thus, under the Federal Circuit's new rule, non-equivalence may be found based on structure in the accused device that results in the device having the mere capability of performing irrelevant, unclaimed functions, *even if the device does not actually perform those functions*.

Tomita submits that this Court should correct the Federal Circuit's error and affirmatively state that differences between the corresponding structures of an

accused device and patented device whose sole significance relate to performing unclaimed functions are irrelevant to equivalence.

III. THIS COURT'S GUIDANCE IS NEEDED TO RESOLVE CONFLICTING OPINIONS BY THE FEDERAL CIRCUIT.

In addition to disregarding this Court's precedent, the Federal Circuit's treatment of equivalence is rife with conflicting decisions, making any attempt to predict the outcome of an equivalence determination uncertain. The Federal Circuit's refusal to confront these inconsistent decisions and provide any clear guidance in this area of law both flies in the face of the Supreme Court's instructions in *Warner-Jenkinson* for the Federal Circuit to do so and defeats the purpose of the Federal Circuit in establishing uniformity in patent law. The Supreme Court is in a unique position to resolve these harms by stepping in to create much-needed guidance where the Federal Circuit has failed to do so and establish clarity and uniformity where currently there is none.

For example, the Federal Circuit's rejection of the principle that a district court is required to "examine evidence on known interchangeability" and its assertion that such a requirement has "*no support in the law*" conflicts with previous Federal Circuit decisions. App. 15a (emphasis added). In particular, in *Hilton Davis Chem. Co. v. Warner-Jenkinson Co.*, the Federal Circuit held that there is such a requirement—explaining that "known interchangeability" is "potent evidence" that a difference between accused and claimed elements is "insubstantial," and holding that, when a record presents

"evidence relevant to the substantiality of the differences," which would include evidence of known interchangeability, "the fact-finder *must consider it*." 62 F.3d 1512, 1518-19 (Fed. Cir. 1995) (en banc) (emphasis added). Obviously, both cannot be true.

Further, the Federal Circuit's rejection of a requirement that evidence of known interchangeability be examined and characterization of "known interchangeability" during oral argument as "one of the less useful terms that we use, of the various terms we use to try to explain what the essence of equivalence is" (Oral Arg. at 4:10, 19:32) conflicts with other Federal Circuit statements highlighting the importance of known interchangeability. *See, e.g.*, *Hilton Davis Chem.*, 62 F.3d at 1519 (stating that known interchangeability is "*potent evidence* that one of ordinary skill in the relevant art would have considered the change insubstantial") (emphasis added); *Overhead Door Corp. v. Chamberlain Grp., Inc.*, 194 F.3d 1261, 1270 (Fed. Cir. 1999) (stating that known interchangeability is "one of the '*hallmarks*' of an equivalent") (emphasis added); *Interactive Pictures*, 274 F.3d at 1383 (referring to the "*known interchangeability test*"; calling known interchangeability "*substantial evidence* supporting equivalence"). While it is not clear what can account for such varying views of the Federal Circuit, it is clear that this issue must be definitively resolved to provide additional certainty to the determination of equivalence. At the very least, the Federal Circuit has created a split in its decisions that it has refused to correct.

In another example, the district court here had applied the following rule—"if two structures known to perform the same function accomplish it significantly

differently, they are not interchangeable" (App. 36a)—which the Federal Circuit implicitly acknowledged was erroneous (App. 15a). The district court, however, had relied on the Federal Circuit's decision in *Toro Co. v. Deere & Co.* in support of that rule, which states (in the context of the function-way-result test) that evidence of *interchangeability* presented by experts "goes to the function or result of these systems, and begs the issue of *the way* in which [the systems] actually work." 355 F.3d 1313, 1324 (Fed. Cir. 2004) (emphasis added). To the extent that courts have interpreted that statement in *Toro* to apply to the insubstantial differences test, as the district court had done here at Nintendo's urging, it conflicts with *Hilton Davis*, where the Federal Circuit explained that known interchangeability is "an important factor to be considered, quite apart from function, way, and result." *Hilton Davis,* 62 F. 3d at 1519. Yet the Federal Circuit has made no attempt to reconcile *Toro* and *Hilton Davis*, despite the obvious confusion that statement in *Toro* has created.

In yet another example, the new principle that the Federal Circuit applied in this case—considering differences between the accused and patented structures that "*result* in" the accused device being able to perform an unclaimed function (App. 13a (emphasis in original); *see supra* Section II)—is irreconcilable with decisions of other Federal Circuit panels. For example, in *Caterpillar Inc. v. Deere & Co.*, the district court had found no equivalence because the accused tractor lacked "a front axle which could obstruct the operator's view of the ground [and which] resulted in improved operator visibility." 224 F.3d at 1380. The Federal Circuit vacated and remanded because the district court had "improperly considered

potential advantages offered by the accused structure that do not relate to the disputed tensioning function." *Id.* Had *Caterpillar* applied the logic of the Federal Circuit here, it would have reached the opposite conclusion—namely, that the "absence of a front axle," and use instead of a "swing link" mechanism attached to each front wheel, is in itself a substantial difference, even though the *sole* advantage of that difference is "improved operator visibility," a function unrelated to the claimed function. *See id.* at 1378, 1380. Similarly, in *Uniloc USA, Inc. v. Microsoft Corp.*, the Federal Circuit rejected the district court's reasoning that, because the output of the algorithm (*i.e.*, the accused structure) used in the accused product was "*more secure*" than that of the algorithm disclosed in the patent, the accused product was substantially different from the patented system. 632 F.3d 1292, 1302, 1305 (Fed. Cir. 2011) (emphasis added). The Federal Circuit explained that "the enhanced functionality of [the accused product] making the output *more secure* should not prevent it from being considered an equivalent structure." *Id.* at 1305 (emphasis added). Again, had *Uniloc* applied the logic of the Federal Circuit here, it would likely have reached the opposite conclusion—namely, that the differences in the algorithms were in themselves substantial, even if the sole advantage of those differences was to make the accused product "more secure," an unrelated function.

The Federal Circuit decision here is irreconcilable with its own precedent. In establishing new law in this case, the Federal Circuit did not address any of these other decisions, despite Tomita's having addressed them in its brief. At the very least, the Federal Circuit has created a split in its decisions that it has refused to correct.

CONCLUSION

For the reasons set out above, the petition for a writ of certiorari should be granted.

Respectfully submitted,

Kenneth L. Stein
Counsel of Record
Ian G. DiBernardo
Stroock & Stroock & Lavan LLP
180 Maiden Lane
New York, New York 10038
(212) 806-5400
kstein@stroock.com

Counsel for Petitioners

August 22, 2017

APPENDIX

APPENDIX A — OPINION OF THE UNITED STATES COURT OF APPEALS FOR THE FEDERAL CIRCUIT, DATED MARCH 17, 2017

UNITED STATES COURT OF APPEALS
FEDERAL CIRCUIT

2016-2015

TOMITA TECHNOLOGIES USA, LLC, TOMITA TECHNOLOGIES INTERNATIONAL, INC.,

Plaintiffs-Appellants,

v.

NINTENDO CO., LTD.,
NINTENDO OF AMERICA INC.,

Defendants-Appellees.

Decided: March 17, 2017

Appeal from the United States District Court for the Southern District of New York in No. 1:11-cv-04256-JSR, Judge Jed S. Rakoff.

Before Prost, Chief Judge, Bryson and Wallach, Circuit Judges.

OPINION

Wallach, Circuit Judge.

The parties' patent infringement dispute concerning the 3DS, a handheld gaming console sold by Appellees Nintendo Co., Ltd. and Nintendo of America Inc. (together, "Nintendo"), returns to this court. Appellants Tomita Technologies USA, LLC and Tomita Technologies International, Inc. (together, "Tomita") sued Nintendo in the U.S. District Court for the Southern District of New York ("District Court"), alleging that the 3DS infringes claim 1 of U.S. Patent No. 7,417,664 ("the '664 patent"). A jury found that the 3DS infringes claim 1 of the '664 patent. We reversed and remanded that finding because it rested upon an incorrect construction of "offset presetting means" in claim 1. *See Tomita Techs. USA, LLC v. Nintendo Co.* (*Tomita I*), 594 Fed.Appx. 657, 659–64 (Fed. Cir. 2014). The District Court held a bench trial on remand and concluded that the 3DS does not infringe "offset presetting means" in claim 1, as properly construed. *See Tomita Techs. USA, LLC v. Nintendo Co.* (*Tomita II*), 182 F.Supp.3d 107, 113–18 (S.D.N.Y. 2016).

Tomita appeals the District Court's noninfringement finding. We have subject matter jurisdiction pursuant to 28 U.S.C. § 1295(a)(1) (2012). We affirm.

BACKGROUND

The subject dispute involves technology that incorporates three-dimensional (i.e., 3D) images, which "typically [are] captured with two cameras providing slightly different images known as stereoscopic images. A viewer perceives a 3D effect when each eye separately views a stereoscopic image intended for that eye. The strength of the 3D effect varies with the viewing

conditions." *Tomita I*, 594 Fed.Appx. at 659. Because the subject appeal has a long history involving technical facts, we recount only those details necessary to dispose of the issues before us.

I. The '664 Patent

Entitled "Stereoscopic Image Picking Up and Display System Based Upon Optical Axes Cross-Point Information," the '664 patent generally discloses "a stereoscopic video image pick-up and display system which is capable of providing the stereoscopic video image having a natural stereopsis even if the video image producing playback conditions are different." '664 patent col. 2 l. 65–col. 3 l. 2. Claim 1 recites

> [a] stereoscopic video image pick-up and display system comprising:
>
> > a stereoscopic video image pick-up device including two video image pick-up means for outputting video information from said pick-up means;
> >
> > *a stereoscopic video image display device for displaying different video images for the eyes of a viewer*; and
> >
> > a medium for transmitting video image information from said stereoscopic video image pick-up device to said stereoscopic video image display device,

> in which said stereoscopic video image pick-up device includes cross-point measuring means for measuring CP information on the cross-point (CP) of optical axes of said pick-up means and outputs information including the CP information and video image information to said medium; and
>
> in which said stereoscopic video image display device includes offset presetting means for offsetting and displaying said different video images based upon said video image information, said cross-point information[,] and information on the size of the image which is displayed by aid stereoscopic video image display device.

Id. col. 21 ll. 44–65 (emphases added). "Offset presetting means" in claim 1, a means-plus-function limitation,[1]

1. "A means-plus-function limitation contemplated by 35 U.S.C. § 112, ¶ 6 ... recites a function to be performed rather than definite structure or materials for performing that function." *Chiuminatta Concrete Concepts, Inc. v. Cardinal Indus., Inc.*, 145 F.3d 1303, 1307 (Fed. Cir. 1998); *see* 35 U.S.C. § 112, ¶ 6 (2006) (explaining that "[a]n element in a claim for a combination may be expressed as a means or step for performing a specified function without the recital of structure, material, or acts in support thereof, and such claim shall be construed to cover the corresponding structure, material, or acts described in the specification and equivalents thereof"). Congress

means "timing control unit 32, signal switch 40, switch control unit 41, and synthesis frame memory 50 described in Figure 3 and column 9 line 44 to column 10 line 29 and equivalents thereof" in the '664 patent. *Tomita I*, 594 Fed. Appx. at 663 (footnote omitted).

A means-plus-function limitation must recite a function *and* a corresponding structure. *See, e.g.*, *Ibormeith IP, LLC v. Mercedes-Benz USA, LLC*, 732 F.3d 1376, 1379 (Fed. Cir. 2013). Only the disputed limitation's structure is at issue. Here, the relevant corresponding structure of the limitation contains two parts: the timing control unit 32 "performs the 'offsetting' portion of the claim function," whereas "[t]he 'displaying' portion of the claim function is performed by the switch control unit 41 presetting the timing of switching of the signal switch 40 for writing of video data into synthesis frame memory 50." *Tomita I*, 594 Fed.Appx. at 663 (internal quotation marks, brackets, and citation omitted).

II. The 3DS

Although primarily designed to play video games, the 3DS has a camera application and an augmented reality application. Similar to "offset presetting means" in claim 1 of the '664 patent, the 3DS produces 3D images in these applications by capturing and offsetting different images

---

amended § 112 when it passed the Leahy-Smith America Invents Act, Pub. L. No. 112-29, § 4(c), 125 Stat. 284, 296 (2011), but the amended statute does not apply here because the application leading to the '664 patent was filed before the amended statute's effective date, *id.* § 4(e), 125 Stat. at 297.

on a grid with horizontal and vertical axes. *See* J.A. 5191, 5193–94. Tomita alleges that these applications, described in greater detail below, infringe the disputed limitation.

III. Procedural Posture

The District Court found that the 3DS neither literally infringes "offset presetting means" in claim 1 of the '664 patent nor infringes that limitation under the doctrine of equivalents. *See Tomita II*, 182 F.Supp.3d at 113–18. The District Court's analysis consisted of two parts, one that examined the "offsetting" and "displaying" portions under the function-way-result test and another that examined those portions under the insubstantial differences test. *See id.* Under both tests, the District Court found that the 3DS and the disputed limitation do not possess equivalent structures. *See id.*

DISCUSSION

I. Standard of Review

"Following a bench trial, we review a district court's conclusions of law de novo and its findings of fact for clear error." *Allergan, Inc. v. Sandoz Inc.*, 796 F.3d 1293, 1303 (Fed. Cir. 2015) (citation omitted). "Infringement, both literal and under the doctrine of equivalents, is an issue of fact ...." *Roton Barrier, Inc. v. Stanley Works*, 79 F.3d 1112, 1125 (Fed. Cir. 1996) (citation omitted). "A factual finding" of noninfringement "is clearly erroneous if, despite some supporting evidence, we are left with a definite and firm conviction that a mistake has been made." *Allergan*, 796 F.3d at 1303 (citations omitted).

II. The District Court Properly Concluded That the 3DS Does Not Infringe Claim 1 of the '664 Patent

Tomita contests the District Court's conclusion that the 3DS does not infringe literally or under the doctrine of equivalents the "offset presetting means" limitation in claim 1 of the '664 patent. *See* Appellants' Br. 44–64. Tomita alleges that the District Court committed legal and factual errors in its analysis of the "offsetting" and "displaying" portions of the corresponding structure in the disputed limitation.[2] *See id.* at 44–57 (discussing legal errors), 58–64 (discussing factual errors). After setting forth the applicable legal framework, we address Tomita's arguments on a portion-by-portion basis.

A. Legal Framework

"To prove infringement, a [party] must prove the [literal] presence of each and every claim element or its equivalent" in the accused product. *Star Sci., Inc. v. R.J. Reynolds Tobacco Co.*, 655 F.3d 1364, 1378 (Fed. Cir. 2011) (citation omitted). "Literal infringement of a means-plus-

2. Tomita raises several arguments in the background section of its brief, *see, e.g.*, Appellants' Br. 24 (contesting certain District Court findings), and in footnotes, *see, e.g.*, *id.* at 51 n.22 (contesting other District Court findings). Tomita has waived those arguments, though we address some of them for completeness. *See In re Baxter Int'l, Inc.*, 678 F.3d 1357, 1362 (Fed. Cir. 2012) (holding that a party waives an argument that it raises in the background section of its brief, but not in the argument section); *SmithKline Beecham Corp. v. Apotex Corp.*, 439 F.3d 1312, 1320 (Fed. Cir. 2006) ("[A]rguments raised in footnotes are not preserved.").

function limitation requires that the relevant structure in the accused device [(1)] perform the identical function recited in the claim *and* [(2)] be identical or equivalent to the corresponding structure in the specification." *Gen. Protecht Grp., Inc. v. Int'l Trade Comm'n*, 619 F.3d 1303, 1312 (Fed. Cir. 2010) (emphasis added) (internal quotation marks and citation omitted). Because the disputed limitation and the 3DS share the same function, the instant appeal concerns only whether the disputed limitation and the 3DS contain equivalent structures. The Supreme Court has described the test for structural equivalence in the means-plus-function context as "an application of the doctrine of equivalents in a restrictive role." *Warner-Jenkinson Co. v. Hilton Davis Chem. Co.*, 520 U.S. 17, 28, 117 S.Ct. 1040, 137 L.Ed.2d 146 (1997). Thus, literal infringement and infringement under the doctrine of equivalents turn on a single question: whether structural equivalency exists between the disputed limitation and the accused product. *See id.*

We apply "two articulations of the test for equivalence," the function-way-result test and the insubstantial difference test. *Voda v. Cordis Corp.*, 536 F.3d 1311, 1326 (Fed. Cir. 2008). We describe these tests in greater detail below.

B. The '664 Patent and the 3DS Do Not Possess Equivalent "Offsetting" Structures

Tomita contests the District Court's finding that "offset presetting means" in claim 1 of the '664 patent and the 3DS do not possess equivalent offsetting structures.

Appellants' Br. 44–52. In so doing, Tomita challenges the District Court's findings under both the function-way-result test and the insubstantial differences test. *See id.* We address Tomita's arguments on a test-by-test basis.

1. The Function-Way-Result Test

The function-way-result test provides that "an element in the accused device is equivalent to a claim limitation if it performs substantially the same function in substantially the same way to obtain substantially the same result." *Voda*, 536 F.3d at 1326 (internal quotation marks and citation omitted). Because the parties do not dispute that the claim limitation and accused device share the same function, our analysis focuses on the "way" and "result" prongs of the test. In assessing each prong, we must determine whether the way the accused product performs the function or the result thereof is "substantially different" from the way or result of the subject patent. *Odetics, Inc. v. Storage Tech. Corp.*, 185 F.3d 1259, 1267 (Fed. Cir. 1999).

The District Court found "that Tomita fails both the way and result prongs of the test." *Tomita II*, 182 F.Supp.3d at 115. With respect to the way prong, the District Court identified the collective effect of three aspects of the 3DS that set its ways apart from the way described in the disputed limitation:

> First, [the 3DS's image] ... transformations can [a]ffect multiple adjustments to an image simultaneously—for instance, vertical

> translations as well as horizontal translations—while the '664 [patent's] relative timing offset is limited to [a]ffecting horizontal translations. Second, [the 3DS's ability to] implement[ ] adjustments in software rather than hardware provides more flexibility, because software can be updated and the [3DS's graphics processing unit] performs other functions related to gaming. Third, [the 3DS's ability to] render [ ] both images [used to create the 3D effect] allows for camera calibration to correct camera misalignment.

Id. (internal citations omitted). The District Court also found another "individual difference that is substantial on its own." *Id.* According to the District Court, the disputed limitation offsets certain images only by adding a single value along the horizontal axis, whereas "the 3DS's [image] transformation[s] ... also accomplish rotations and scalings," thus demonstrating that the 3DS considers other factors that cause its "transformation[s to] ... operate" in ways "substantially different" from the disputed limitation. *Id.* (citation omitted).

Turning to the result prong, the District Court concluded that the disputed limitation and the 3DS yield substantially different results. The District Court found that "[t]he result of the structure in the '664 patent is pixel data stored in frame memory ... [,] whereas the 3DS result is an image displayed on an LCD screen." *Id.* The District Court also found that "the '664 patent creates and stores a single, stereoscopic image[ ] before displaying it," whereas the 3DS does not. *Id.* at 116 (citation omitted).

Tomita does not challenge the District Court's factual findings; instead, it asserts various legal errors, none of which are persuasive. First, Tomita contends that the District Court improperly applied the function-way-result test because it is "[i]rrelevant." Appellants' Br. 29; *see id.* at 30. Although the Supreme Court has acknowledged that the test "often provides a poor framework for analyzing" non-mechanical products or processes, *Warner-Jenkinson*, 520 U.S. at 39–40, 117 S.Ct. 1040, it has never disavowed the application of that test under particular circumstances and has left it to our court to decide the test's application in future cases, *id.* at 40. Indeed, we have applied the test to patents covering products and processes similar to the '664 patent. *See, e.g.*, *Brilliant Instruments, Inc. v. GuideTech, LLC*, 707 F.3d 1342, 1346–49 (Fed. Cir. 2013) (analyzing a patent that discloses circuits that measure the timing errors of digital signals in high speed micro-processors).

Second, Tomita avers that the District Court "flipped [the] equivalence analysis on its head" in the function-way-result test by "evaluating equivalence in the context of the accused device," "rather than evaluating equivalence in the context of the invention." Appellants' Br. 25 (citation omitted). However, evaluating whether the accused product possesses something of significance that is not found in the corresponding structure of the subject patent is precisely what the District Court was required to assess. *See, e.g.*, *Gemstar-TV Guide Int'l, Inc. v. Int'l Trade Comm'n*, 383 F.3d 1352, 1363 (Fed. Cir. 2004) (holding that an accused product did not infringe because it "relied on a different technology that could produce results unattainable by" the corresponding structure in the subject patent).

Third, Tomita contends that the District Court found under the way prong "that software implementation essentially could never be equivalent to a hardware implementation" and that such a finding conflicts with our decision in *Overhead Door Corp. v. Chamberlain Group, Inc.*, 194 F.3d 1261 (Fed. Cir. 1999). Appellants' Br. 32; *see id.* at 39–41. In support of its argument, Tomita quotes the following passage from *Overhead Door*: "it is a fundamental and well understood tenet of the computing art that any software process can be transformed into an equivalent hardware process, and any hardware process can be transformed into an equivalent software process." *Id.* at 20–21 (quoting 194 F.3d at 1269). Although we found in *Overhead Door* that the expert's testimony precluded summary judgment of noninfringement, we did not hold that a software implementation of a particular function is invariably equivalent to a hardware implementation of the same function. *See* 194 F.3d at 1269–71. The District Court therefore did not err in declining to rely upon the quoted passage from *Overhead Door*.

2. The Insubstantial Differences Test

Under the insubstantial differences test, "an equivalent results from an insubstantial change which adds nothing of significance to the structure, material[,] or acts disclosed in the" relevant patent. *Valmont Indus., Inc. v. Reinke Mfg. Co.*, 983 F.2d 1039, 1043 (Fed. Cir. 1993). The District Court found substantial differences between the offsetting structure in the 3DS and in the "offset presetting means" limitation in claim 1 of the '664 patent. The District Court found that "the hardware[-]

based timing mechanism of the '664 patent cannot provide the same functionality as the more flexible software-based transformation[s] ... in the 3DS, which can [a]ffect" several different image transformations at the same time. *Tomita II*, 182 F.Supp.3d at 117 (citations omitted). The District Court also found that the 3DS uses transformations to render new images, effectively changing the location of all the images' pixels along both the horizontal and vertical axes of a grid, whereas the '664 patent only offsets a single image along the horizontal axis. *See id.*

Tomita does not contest the District Court's factual findings; instead, it avers that the District Court "erred as a matter of law in relying on the 3DS's camera calibration feature" in its analysis, "which is unrelated to the function of the offset presetting means." Appellants' Br. 49. Tomita predicates its argument on the District Court's statement that "[a] person of ordinary skill in the art would consider the[ ] differences to add something of significance to the '664 patent's offsetting structure, *including because they allow the 3DS to correct for camera calibration*." *Tomita II*, 182 F.Supp.3d at 117 (emphasis added) (citation omitted).

The District Court's opinion belies Tomita's argument. None of the District Court's substantial differences findings rely upon camera calibration; instead, those findings rely upon differences in software and hardware, as well as image transformations. *See id.* Although the District Court found that these differences *result* in significant additions to the 3DS, like camera calibration, that does not mean that the District Court equated the results of the

substantial differences with the differences themselves. Even if the District Court improperly considered camera calibration, it nonetheless found that the structure that performs offsetting in the 3DS is substantially different from the structure in the disputed limitation, *see id.* and Tomita has not presented any evidence showing why these structures are not substantially different, *see generally* Appellants' Br.

Tomita also avers that the District Court "erred as a matter of law in failing to evaluate equivalence for the 3DS's mode of operation in which images are displayed from an SD card" because "a product that infringes a patent only part of the time, or in certain modes of operation, is still infringing." *Id.* at 51 (citation omitted). According to Tomita, the District Court "evaluated equivalence only for the 3DS's mode of operation in which it performs" multiple image transformations at the same time and corrects for camera calibration. *Id.* at 51–52. Even if Tomita is correct that the District Court evaluated equivalence only for one 3DS mode of operation, that does not change the fact that the District Court found several other substantial differences between the '664 patent and the 3DS, *see Tomita II*, 182 F.Supp.3d at 116–18, such that the District Court properly found no infringement.

3. Tomita's Remaining Arguments Fail

Tomita raises additional arguments that we find unpersuasive. Tomita alleges that the District Court "improperly merge[d]" the function-way-result and insubstantial differences tests. Appellants' Br. 45. Tomita

bases its argument on the District Court's statement that "if two structures known to perform the same function *accomplish it significantly differently*, they are not interchangeable." *Id.* at 46–47 (quoting *Tomita II*, 182 F.Supp.3d at 117 (emphasis added)).

The District Court's opinion does not support Tomita's argument. The quoted passage appears in the portion of the District Court's opinion analyzing the results of the insubstantial differences test and, in particular, addressing the known interchangeability of certain techniques. *Tomita II*, 182 F.Supp.3d at 117. The District Court neither stated that a "significantly differently" test controlled its inquiry, nor repeated "significantly differently" in its analysis. *See id.* at 113–18. "We will not find legal error based upon an isolated statement stripped from its context." *VirnetX Inc. v. Apple Inc.*, 665 Fed. Appx. 880, 886 (Fed. Cir. 2016).

To the extent that Tomita suggests that the District Court was *required* to examine evidence on known interchangeability, *see* Appellants' Br. 44–49, that position has no support in the law. The Supreme Court has stated that

> the particular linguistic framework used is less important than whether the test is probative of the essential inquiry: Does the accused product or process contain elements identical or equivalent to each claimed element of the patented invention? Different linguistic frameworks may be more suitable to different

> cases, depending on their particular facts. A focus on individual elements and a special vigilance against allowing the concept of equivalence to eliminate completely any such elements should reduce considerably the imprecision of whatever language is used. An analysis of the role played by each element in the context of the specific patent claim will thus inform the inquiry as to whether a substitute element matches the function, way, and result of the claimed element, or whether the substitute element plays a role substantially different from the claimed element.

Warner-Jenkinson, 520 U.S. at 40, 117 S.Ct. 1040. The District Court conducted a comprehensive comparison of the "offsetting" structures in the 3DS and the '664 patent and, thus, examined equivalency at a level that comports with what precedent demands. *See Tomita II*, 182 F.Supp.3d at 117. Therefore, the District Court properly concluded that the 3DS does not infringe claim 1 of the '664 patent.

C. The Court Need Not Address Whether the '664 Patent and the 3DS Possess Equivalent "Displaying" Structures

Tomita challenges several aspects of the District Court's finding that the 3DS and the disputed limitation of the '664 patent do not possess equivalent displaying structures. *See* Appellants' Br. 53–64. However, we need not address these arguments because Tomita has failed

to demonstrate that the 3DS and the disputed limitation possess equivalent offsetting structures, and a party will prevail on infringement only if it establishes the literal "presence of *each and every claim element* or its equivalent" in the accused product. *Star Sci.*, 655 F.3d at 1378 (emphasis added) (citation omitted).

CONCLUSION

We have considered Tomita's remaining arguments and find them unpersuasive. Accordingly, the final judgment of the U.S. District Court for the Southern District of New York is

AFFIRMED

APPENDIX B — ORDER OF THE UNITED STATES COURT OF APPEALS FOR THE FEDERAL CIRCUIT, FILED MAY 24, 2017

UNITED STATES COURT OF APPEALS
FOR THE FEDERAL CIRCUIT

2016-2015

TOMITA TECHNOLOGIES USA, LLC, TOMITA TECHNOLOGIES INTERNATIONAL, INC.,

Plaintiffs-Appellants

v.

NINTENDO CO., LTD., NINTENDO OF AMERICA INC.,

Defendants-Appellees

Appeal from the United States District Court for the Southern District of New York in No. 1:11-cv-04256-JSR, Judge Jed S. Rakoff.

ON PETITION FOR REHEARING *EN BANC*

Before Prost, *Chief Judge*, Newman, Lourie, Bryson*, Dyk, Moore, O'Malley, Reyna, Wallach, Taranto, Chen, Hughes, and Stoll, *Circuit Judges*.

Per Curiam.

---

* Circuit Judge Bryson participated only in the decision on the petition for panel rehearing.

ORDER

Appellants Tomita Technologies USA, LLC and To-mita Technologies International, Inc. filed a petition for rehearing *en banc*. The petition was first referred as a petition for rehearing to the panel that heard the appeal, and thereafter the petition for rehearing *en banc* was referred to the circuit judges who are in regular active service.

Upon consideration thereof,

IT IS ORDERED THAT:

The petition for panel rehearing is denied.

The petition for rehearing *en banc* is denied.

The mandate of the court will issue on May 31, 2017.

FOR THE COURT

May 24, 2017
Date

/s/ Peter R. Marksteiner
Peter R. Marksteiner
Clerk of Court

APPENDIX C — OPINION OF THE UNITED STATES DISTRICT COURT FOR THE SOUTHERN DISTRICT OF NEW YORK, FILED APRIL 25, 2016

UNITED STATES DISTRICT COURT
SOUTHERN DISTRICT OF NEW YORK.

11–cv–4256(JSR)

TOMITA TECHNOLOGIES USA, LLC; TOMITA TECHNOLOGIES INTERNATIONAL, INC.,

Plaintiffs,

v.

NINTENDO CO., LTD.; NINTENDO OF AMERICA INC.,

Defendants.

Signed April 24, 2016

FINDINGS OF FACT AND CONCLUSIONS OF LAW

JED S. RAKOFF, United States District Judge

3D images have a storied history on the big screen, but they now also appear on the small screens of handheld entertainment devices. Nintendo Co., Ltd. and Nintendo of America Inc. (collectively, "Nintendo") produce one such device, a pocket gaming console called the Nintendo 3DS (the "3DS"). Two 3DS applications, its camera application

and its augmented reality game card application, allow users to capture and display stereoscopic, or 3D, images. Tomita Technologies USA, LLC and Tomita Technologies International (collectively, "Tomita") claim that these applications infringe on Claim 1 of U.S. Patent No. 7,417,664 (the "'664 patent"). Following a jury trial where Tomita prevailed on infringement and validity of the '664 patent, the Federal Circuit reversed this Court's construction of the patent's "offset presetting means" limitation and announced its own. *See Tomita Techs., USA, LLC v. Nintendo Co., Ltd.*, 594 Fed.Appx. 657, 659–63 (Fed.Cir.2014) (*Tomita II*); *Tomita Technologies, USA, LLC v. Nintendo Co., Ltd.*, 855 F.Supp.2d 33, 42–43 (S.D.N.Y.2012) (*Tomita I*). After additional discovery and motion practice, this Court held a bench trial to determine whether the 3DS infringes under the Federal Circuit's construction. After carefully reviewing the materials from trial, including testimony of expert witnesses on each side, the Court concludes that it does not. Based on the findings of fact and conclusions of law set forth below, Tomita's claims are hereby dismissed.

3D images are a trick, an illusion. And while a good magician never reveals her tricks, the Court must explain this one in detail. *See also Tomita I* at 35, (revealing the trick behind 3D glasses). Although not, in fact, three-dimensional, 3D images create a perception of depth in the mind's eye. They create this perception by delivering two slightly different images to a viewer's right and left eyes. One typical way to deliver separate images to separate eyes is to overlap left- and right-eye images. But the images should not be overlapped completely, such that

they are stacked directly on top of one another. Instead, one or both images must be shifted along their common horizontal axis, creating an offset. How much the images are shifted relative to each other will alter the viewer's perception of depth, known as the viewer's "stereoscopic feelings." Shifting the images just the right amount will create optimal stereoscopic feelings.

The invention described in the '664 patent aims to create optimal stereoscopic feelings. It does so by capturing two video images, a "left-video" image and a "right-video" image, as well as cross-point data that allows it to calculate the perfect offset between the images. It applies the offset as it weaves the images together before storing and displaying them. In particular, Claim 1 of the '664 patent contains the following limitation: "offset presetting means for offsetting and displaying said video images based upon said video image information, said cross-point information and information on the size of the image which is displayed by said stereoscopic video image display device." '664 Patent, 21:61–65. As a means-plus-function element under 35 U.S.C. § 112(f), the "offset presetting means" has two aspects: its function and a corresponding structure. This Court identified its function as "offsetting and displaying said different video images based upon said video image information, said cross-point information and information on the size of the image which is displayed by said stereoscopic video image display device." *Tomita I* at 42. The Court then held that the '664 patent described various embodiments of the structure corresponding to this function. *Id.* The Federal Circuit reversed this construction, finding only

a single corresponding structure for "offset presetting means," depicted in Fig. 3 of the '664 patent:

FIG.3

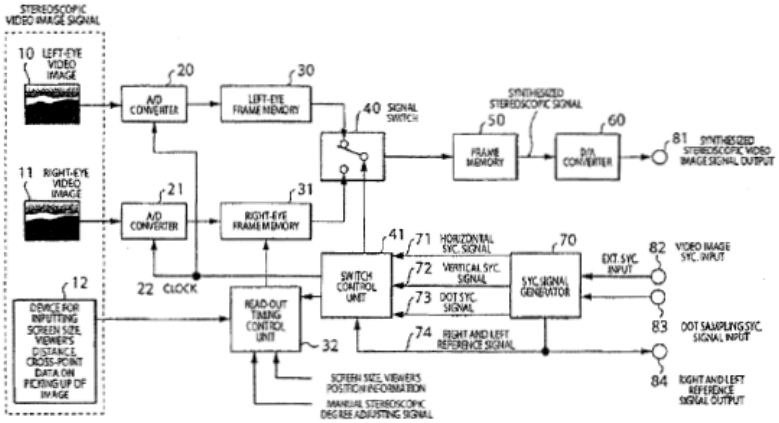

The Federal Circuit identified the corresponding structure of the offset presetting means as "timing control unit 32, signal switch 40, switch control unit 41, and synthesis frame memory 50 described in Figure 3 and column 9 line 44 to column 10 line 29 and equivalents thereof." *Tomita II* at 663. The Federal Circuit split the components into two groups. Timing control unit 32 performs the " 'offsetting' portion of the claim function," while "the 'displaying' portion of the claim function is performed by 'the switch control unit 41 preset[ting] the timing of switching of the signal switch 40 for writing of video data into synthesis frame memory 50.'" *Id.* at 663 (quoting '664 patent at col. 10 ll. 26–29) (alteration in original). Based on the descriptions in the patent, the components comprising the corresponding structure must include the components' inputs and outputs. *See* '664 patent at cols. 9–10 ll. 44–29. Otherwise, the components

would "just float in the air, so there wouldn't be any functionality." Tr. 306:24–307:4.

So how do these components accomplish the 3D image trick? To make a single, stereoscopic image, the components must weave together the left- and right-eye image pixel data input to signal switch 40. Tr. 373:12–15. Signal switch 40 does not alter the pixel data that it receives; instead, it simply writes the data into frame memory 50. Tr. 50:19–23; Tr. 72:14–16; Tr. 315:4–22. However, controlled by switch control unit 41, signal switch 40 alternates the lines of pixel data it writes into frame memory 50, Tr. 372:22–373:2; Tr. 374:4–5, so that if one line comes from the left-eye frame memory, the next line will come from the right-eye frame memory. Tr 50: 16–23. In this way, signal switch 40, switch control unit 41, and their inputs produce an interleaved stereoscopic image stored in frame memory 50.

Read-out timing control unit 32 adds a twist, the offset, to this straightforward process of interweaving. Read-out timing control unit 32 calculates the desired amount of offset based on cross-point information and screen-size information. Tr. 71:11–14; Tr. 310:16–24; 337:15–338:2. It also receives the timing signal for signal switch 40 as an input. *Id.*; Tr. 310:16–18. Based on the desired offset and the timing signal for signal switch 40, read-out timing control unit 32 generates a clock signal, which adjusts the input of the right-eye image data into signal switch 40. Tr. 310:19–311:23. Specifically, the clock signal causes the right-eye image data to be advanced or delayed relative to the left-eye image data when it flows

through signal switch 40. Tr. 309:11–13. Thus, instead of transferring alternating rows of pixel data that line up into a neat stack, signal switch 40 transfers right-eye pixel data rows that are horizontally offset from the left-eye rows, delayed or advanced by some number of pixels. Tr. 311:11–20. This difference in the relative timing of when the left- and right-eye pixel data are written into frame memory 50 creates the desired stereoscopic feelings. Tr. 106:11–14; Tr. 309:7–13.

The 3DS also accomplishes the 3D image trick by offsetting left- and right-eye images. First, the 3DS uses its two cameras, which are of typical quality for a mobile device, to capture left- and right-eye images. Tr. 320:2–10. The images are initially stored in the 3DS's main memory. Tr. 320:11–16. The 3DS's central processing unit ("CPU") then calculates a transformation matrix for each image, based on the desired offset value. Tr. 322:15–21. The 3DS's graphics processing unit ("GPU") applies these transformation matrices to the left- and right-eye images. Tr. 323:11–324:7. Specifically, a graphics software library called OpenGL interfaces with the GPU and hands it the original image and the transformation matrix. *Id.*; Tr. 169:18–25. The GPU transforms the original image into a new, offset image according to the parameters of the matrix. *Id.* The new, offset image is then deposited into a render buffer before being moved to a left or right display buffer. Tr. 350:25–351:3.

The process of transforming an old image into a new image is known as "rendering." Tr. 324:9–11. It is possible to render a digital image using a matrix because

a digital image is made up of a quantity of pixels, each of which can be associated with an X and Y coordinate based on its location in the image. Tr. 110:17–112:2. Some kinds of matrices take an original set of coordinates, X and Y, and map them to a new set of coordinates, X' and Y', effectively moving a pixel from one location in an image to another. Tr. 76:20–77:2; Tr. 327:18–21; Tr. 349:15–25. Some of these matrices can be classified as "affine transformation matrices," which means that any pixels located on a line before the transformation will still be on a line together after the transformation. Tr. 76:20–77:2. The lengths and angles between lines may not be preserved, however. PX 508 at 207. For example, matrices that accomplish translations (shifting an image in some direction), rotations (spinning an image around), or scalings (making an image larger or smaller) are all affine transformation matrices. *Id.*; Tr. 76:20–77:2; Tr. 327:12–17. The matrices calculated by the 3DS's CPU and handed off to its GPU by OpenGL are affine transformation matrices. Tr. 322:15–21; Tr. 323:11–324:7. The relative timing offsets effected by the '664 patent could also be accomplished using an affine transformation matrix: a horizontal translation that shifts each pixel in an image to the left or right by a set amount is a simple example of an affine transformation. Tr. 119:20–25; Tr. 327:22–328:3.

Once the rendered, offset images are deposited in the left and right display buffers, they still must be interwoven to create a single, stereoscopic image. In the 3DS, interleaving is accomplished by a liquid crystal display ("LCD") controller, which interfaces between the CPU and GPU and the 3DS's LCD screen. Tr. 53:12–54:12;

362:23–25. Specifically, one part of the LCD controller, the data request control unit, requests "chunks" of 30 to 40 pixels at a time from a display buffer. Tr. 364:4–19; 366:23–367:5. A different part of the LCD controller, the register configuration, contains registers holding parameters that configure the operation of the data request control unit. Tr. 236:13–19. When the relevant parameter there, PDC_MODE_0, is set to value two, or stereoscopic display mode, the data request control unit alternates between display buffers when requesting data, such that it will request the first line of one buffer, one chunk of data at a time, and then request a line from the other display buffer, also one chunk at a time. Tr. 65:21–66:3; Tr. 174:1–175:16; Tr. 236:17–22; Tr. 246:16–247:8.

The data request control unit gives the image data to an ansychronous first-in/first-out cue ("Async FIFO"). Tr. 367:15–19. An Async FIFO is a memory module that is used in many electronic systems with multiple clock systems. Tr. 64:6–24. In the 3DS, it bridges the core clock system with the video clock system, so that the stereoscopic image will display properly on the 3DS's screen. *Id.*; Tr. 381:14–17. The 3DS's Async FIFO is not big enough to hold an entire stereoscopic image by itself. Tr. 381:23–25. Instead, the data out unit takes the data from the Async FIFO and displays it on the 3DS's upper LCD screen. Tr. 63:25–64:5.

Against this background of how the 3DS creates its three dimensional illusion, the Court turns to the question of whether the 3DS's performance of the illusion is so similar to the '664 patent as to infringe it. Tomita claims

that the 3DS infringes the '664 patent literally or under the doctrine of equivalents. In this case, however, both literal infringement and infringement under the doctrine of equivalents reduce to essentially identical inquiries.

"Literal infringement of a means-plus-function limitation requires that the relevant structure in the accused device perform the identical function recited in the claim and be identical or equivalent to the corresponding structure in the specification." *Gen. Protecht Grp., Inc. v. Int'l Trade Comm'n,* 619 F.3d 1303, 1312 (Fed.Cir.2010); *see Odetics, Inc. v. Storage Tech. Corp.,* 185 F.3d 1259, 1267 (Fed.Cir.1999) ("Functional identity and either structural identity or equivalence are *both* necessary."). Tomita has already satisfied the functional identity half of this formulation. This Court upheld the jury's verdict of infringement, and the parties agree that the Federal Circuit did not modify the function of the "offset presetting means" limitation on appeal. *See* Joint Proposed Pretrial Consent Order at 3, ECF No. 247. Neither party argues that the structures of the 3DS and '664 patent are identical. Therefore, to satisfy the second half of the literal infringement test, Tomita must show structural equivalence.

The Supreme Court has described the test for structural equivalence in the means-plus-function context as "an application of the doctrine of equivalents in a restrictive role." *Warner–Jenkinson Co., Inc. v. Hilton Davis Chem. Co.,* 520 U.S. 17, 28, 117 S.Ct. 1040, 137 L.Ed.2d 146 (1997); *see Caterpillar Inc. v. Deere & Co.,* 224 F.3d 1374, 1379 (Fed.Cir.2000) ("The tests for equivalence

under § 112[(f)] and the doctrine of equivalents are closely related, and involve similar analyses of insubstantiality of differences.") (internal quotation marks omitted). Accordingly, Tomita's claims of literal infringement and infringement under the doctrine of equivalents both turn on whether the 3DS's structure is "equivalent," in either the means-plus-function sense or the doctrine of equivalents sense, to the structure corresponding to the offset presetting means. *See Order* dated May 28, 2015, at 1–2, ECF No. 234.

The Federal Circuit "applies two articulations of the test for equivalence," the function-way-result test and the insubstantial differences test. *Voda v. Cordis Corp.*, 536 F.3d 1311, 1326 (Fed.Cir.2008). Tomita bears the burden of satisfying one of these tests, in either its means-plus-function form or its doctrine of equivalents form, by a preponderance of the evidence. *Centricut, LLC v. Esab Group, Inc.*, 390 F.3d 1361, 1367 (Fed.Cir.2004). The Court considers whether Tomita has borne its burden for each test in turn, starting with the function-way-result test.

As a threshold matter, Tomita argues that the function-way-result test should not apply here. *See* Plaintiffs' Proposed Findings of Fact and Conclusions of Law in Connection with Post–Trial Written Summation (Corrected), ¶ 152, ECF No. 252. It is true that the Supreme Court has recognized that the function-way-result test "often provides a poor framework for analyzing [non-mechanical] products or processes." *Warner–Jenkinson Co., Inc. v. Hilton Davis Chemical Co.*, 520 U.S. 17, 39–40, 117 S.Ct. 1040, 137 L.Ed.2d 146 (1997). However,

the Supreme Court has never disqualified the function-way-result test from any particular set of cases and went on in *Warner–Jenkinson* to entrust the Federal Circuit with the "refinement" of specific tests for equivalence. *Id.* The Federal Circuit has applied the function-way-result test to patents covering electronic products and processes similar to the '644 patent. *See, e.g., Brilliant Instruments, Inc. v. GuideTech, LLC,* 707 F.3d 1342 (Fed.Cir.2013); *Energy Transp. Group, Inc. v. William Demant Holding A/S,* 697 F.3d 1342 (Fed.Cir.2012). Accordingly, the Court does consider the function-way-result test here.

For present purposes, the means-plus-function version of the function-way-result test is essentially identical to the doctrine of equivalents version. The Federal Circuit has explained that "[a] key feature that distinguishes 'equivalents' [in the means-plus-function context] and 'equivalents' under the doctrine of equivalents is that [means-plus-function] equivalents must perform the identical function of the disclosed structure, while equivalents under the doctrine of equivalents need only perform a substantially similar function." *Kemco Sales, Inc. v. Control Papers Co., Inc.,* 208 F.3d 1352, 1364 (Fed. Cir.2000) (citations omitted); *see Odetics, Inc. v. Storage Technology Corp.,* 185 F.3d 1259, 1267 (Fed.Cir.1999). In this case, functional identity has already been established, and the Court only needs to consider the way and result prongs of the test. "Because the 'way' and 'result' prongs are the same under both the [means-plusfunction] and doctrine of equivalents tests, a structure failing the [means-plus-function] test under either or both prongs must fail the doctrine of equivalents test for the same

reason(s)." *Kemco Sales, Inc. v. Control Papers Co., Inc.,* 208 F.3d 1352, 1364 (Fed.Cir.2000).

The Court concludes that Tomita fails both the way and result prongs of the test. In applying each prong, the Court asks whether the way that the 3DS performs the offsetting and displaying function or the result thereof is "substantially different" from the way or result of the '664 patent. *Odetics,* 185 F.3d at 1267. Tomita must show that any differences between the ways and results of the 3DS and the '664 patent are insubstantial. *Id.* Tomita fails the way prong of the test because there are substantial differences between using matrix transformations in software to adjust left- and right-eye images and using relative timing in hardware to offset only a right-eye image. Tr. 351:8–352:4. The Court acknowledges that individual differences, such as using software versus hardware, might not be sufficiently substantial on their own. *See Interactive Pictures Corp. v. Infinite Pictures,* Inc., 274 F.3d 1371, 1383 (Fed.Cir.2001) (observing that hardware and software implementations can be equivalent despite "ancillary changes in affected circuitry and packaging") (citing *Overhead Door Corp. v. Chamberlain Group, Inc.,* 194 F.3d 1261, 1269–70 (Fed.Cir.1999)). However, taken together, these differences show that the 3DS and the '664 patent go about offsetting and displaying in substantially different ways.

Specifically, the differences combine to allow the 3DS to operate more flexibly and to accomplish multiple adjustments at once. First, matrix transformations can effect multiple adjustments to an image simultaneously—

for instance, vertical translations as well as horizontal translations—while the '664 relative timing offset is limited to effecting horizontal translations. Tr. 327:15–17. Second, implementing adjustments in software rather than hardware provides more flexibility, because software can be updated and the GPU performs other functions related to gaming. Tr. 353:10–17. Third, rendering both images allows for camera calibration to correct camera misalignment. Tr. 324:14–21; 352:13–21. Collectively, these amount to substantial differences.

The Court also finds at least one individual difference that is substantial on its own. The '664 patent accomplishes a single horizontal translation through relative timing, offsetting the right-image by a single value. In mathematical terms, this amounts to adding a single number to the horizontal coordinate of a pixel, so X', the new horizontal coordinate, will equal X (the old horizontal coordinate) plus t (the offset value). But the effect on the horizontal coordinate of a given pixel transformed by a matrix in the 3DS cannot be reduced to the addition of single value. Instead, the 3DS's transformation matrices also accomplish rotations and scalings, which will affect the horizontal coordinates of pixels. Tr. 350:8–22. X' in the 3DS cannot be expressed simply as X plus t, but will instead depend on the position of the pixel in the original image and other factors, such as the amount of rotation. Thus, focusing only on their effects on horizontal coordinates, the '664 patent's relative timing offsets and the 3DS's transformation matrices operate in substantially different ways.

The results of the ’664 patent’s corresponding structure to the offset presetting means and the allegedly substitute structure in the 3DS are also substantially different. The result of the structure in the ’664 patent is pixel data stored in frame memory 50 whereas the 3DS result is an image displayed on an LCD screen. The Court takes expert witness Favalora’s point that LCD screens can be “read.” (Indeed, the Court is “reading” from one now as it writes this opinion.) Tr. 146:13–15. However, pixel data is not readable and viewable to the naked human eye, whereas an image on an LCD screen is. Put another way, one of ordinary skill in the art would not recognize an LCD display as a memory. Tr. 382:15–25. Moreover, the ’664 patent creates and stores a single, stereoscopic image, before displaying it, by writing alternating lines of pixels into frame memory 50. Tr. 138:17–19.

The 3DS does not create a single image before displaying it. Tr. 380:13–14. Instead, the data request control unit reads from the left and right image buffers and passes batches of data, each consisting of less than a full line of pixels, to the Async FIFO, which is not large enough to hold an entire stereoscopic image. Tr. 136:19–21; Tr. 364:4–19. The data out unit then takes data from the Async FIFO and displays it on the 3DS’s upper LCD screen. Tr. 63:25–64:5. Thus, the 3DS’s stereoscopic image is not composed as a unified whole until it is displayed on the LCD screen. Both of these differences in result are substantial. Accordingly, Tomita has failed both the way and result prongs of the function-way-result test and has not proved infringement in this manner.

Tomita also fails the insubstantial differences test. "Under the insubstantial differences test, '[a]n element in the accused device is equivalent to a claim limitation if the only differences between the two are insubstantial.'" *Voda v. Cordis Corp.,* 536 F.3d 1311, 1326 (Fed.Cir.2008) (quoting *Honeywell Int'l Inc. v. Hamilton Sundstrand Corp.,* 370 F.3d 1131, 1139 (Fed.Cir.2004)). The Federal Circuit has not been as clear about the precise differences between equivalence in the means-plus-function context and under the doctrine of equivalents when applying the insubstantial differences test as opposed to the function-way-result test. It is clear that "their tests for equivalence are closely related, involving similar analyses of insubstantiality of differences." *Odetics,* 185 F.3d at 1267 (Fed.Cir.1999) (citation and internal quotation marks omitted). However, "the [means-plus-function] statutory equivalence analysis, while rooted in similar concepts of insubstantial differences as its doctrine of equivalents counterpart, is narrower. This is because, under [means-plus-function] equivalence, functional *identity* is required." *Id.* (citation omitted). As noted above, functional identity has already been established here. Accordingly, the Court concludes that, as with the function-way-result test, application of the insubstantial differences test is essentially the same for purposes of mean-plus-function equivalence and under the doctrine of equivalents in this case. Moreover, because the Court concludes that Tomita has failed the doctrine-of-equivalents version of the insubstantial differences test and the means-plus-function version is "narrower," any discrepancies between the two would not change the ultimate result. *Id.*

The differences between the '664 patent and the 3DS discussed above are also relevant to the insubstantial differences inquiry. In particular, to prevail in spite of such differences, Tomita must show that, "from the perspective of one of ordinary skill in the art, [they] add[ed] nothing of significance to" the corresponding structure of the offset presetting means in the '664 patent. *Valmont Indus., Inc. v. Reinke Mfg. Co., Inc.,* 983 F.2d 1039, 1043–44 (Fed.Cir.1993). Known interchangeability is an important, although not dispositive, factor in this showing. *See Graver Tank & Mfg. Co. v. Linde Air Prods. Co.,* 339 U.S. 605, 609, 70 S.Ct. 854, 94 L.Ed. 1097 (1950); *Chiuminatta Concrete Concepts, Inc. v. Cardinal Indus., Inc.,* 145 F.3d 1303, 1309–10 (Fed.Cir.1998).

Tomita has failed to show by a preponderance of the evidence that those of ordinary skill in the art would see the differences between the 3DS and the '664 patent as adding nothing of significance. The Court does find that using relative timing and using matrix transformations to accomplish image offsets were both known to the art prior to the issuance of the '664 patent. Tr. 85:7–13; Tr. 88:20–89:3; Tr. 428:9–23; PX 502 at 10:62–11:11, 11:61–12:2, 12:23–35 (1998 patent describing use of timing offsets); PX 503 at 11:14–22 (same); PX 507 at 31–36 (OpenGL specifications describing matrix transformations); PX 508 at 207 (computer graphics manual describing matrix transformations). However, these techniques are not interchangeable for purposes of an insubstantial differences analysis simply because they were both known to accomplish horizontal translations used to create stereoscopic images. Known interchangeability must not be collapsed into a functional identity test; instead,

if two structures known to perform the same function accomplish it significantly differently, they are not interchangeable. *See Chiuminatta,* 145 F.3d at 1309, 1311 (Fed.Cir.1998) ("The question of known interchangeability is not whether both structures serve the same function, but whether it was known that one structure was an equivalent of another.")(conducting similar interchangeability analysis in context of means-plus-function and doctrine of equivalents inquiries); *see also Toro Co. v. Deere & Co.,* 355 F.3d 1313, 1324 (Fed.Cir.2004) ("[Plaintiff] highlights certain statements (*e.g.,* from its expert witnesses) that [two systems] can be used interchangeably, but this goes to the function or result of these systems, and begs the issue of the way in which [the systems] actually work.").

In this case, notwithstanding their common task of shifting images horizontally, the '664 patent's offsetting and displaying structures and the 3DS's analogous structures are not interchangeable or equivalent because a person of ordinary skill in the art would recognize significant differences between them. Tr. 348:5–25; Tr. 351:9–352:4; Tr. 355:1–8; Tr. 359:14–21; Tr. 385:14–387:25. In particular, with respect to the offsetting structures, the hardwarebased timing mechanism of the '664 patent cannot provide the same functionality as the more flexible software-based transformation matrices in the 3DS, which can effect other affine transformations in addition to translations and can effect multiple such transformations at once. Tr. 327:12–17; Tr. 348:22–25. Moreover, the 3DS uses matrix transformations to render new left and right images, effectively changing the location of all the images' pixels along two axes, whereas the '664 patent only offsets a single image along a single axis. Tr. 351:9–24; Tr. 352:13–

16, Tr. 356:4–17. A person of ordinary skill in the art would consider these differences to add something of significance to the '664 patent's offsetting structure, including because they allow the 3DS to correct for camera calibration. *Id.*

A person of ordinary skill in the art would also see significant differences between the '664 patent's displaying structures and the analogous structures in the 3DS. In the '664 patent, frame memory 50 holds a complete interleaved stereoscopic image. Tr. 138:17–19; Tr. 387:5–14. However, to display the image to a human eye—which, after all, is necessary to induce any stereoscopic feelings—frame memory 50 must still pass the image to D/A converter 60 which "converts the digitalized video signal into analog signal for outputting it as a synthesized stereoscopic signal," which then goes to an LCD display. '664 patent at col. 10 ll. 43–45; *see* Tr. 378:16–379:1. However, D/A converter 60 is not part of the structure corresponding to the offset presetting means. *Tomita II* at 663. As such, the structure at issue in the '664 patent does not display a stereoscopic image on an LCD screen and only holds it in memory. By contrast, the 3DS does not store an interleaved stereoscopic image in memory. Tr. 380:13–14. Instead, it only composes the stereoscopic image as a whole as it displays it on its upper LCD screen. Tr. 63:25–64:5. From the perspective of one of ordinary skill in the art, only composing the stereoscopic image as it is displayed by the LCD adds something of significance to the '664 patent's storage of an image in memory. Tr. 382:15–383:5.[1]

---

1. The Court is mindful that component-by-component analysis is "impermissible." *Caterpillar Inc. v. Deere & Co.,* 224

This addition has further practical significance because it reduces the latency, or wait time, of the display of the stereoscopic image: with the '664 patent, you must fill up frame memory 50 before any display can occur, whereas with the 3DS the data goes directly to the display. Tr. 387:5–14. This can result in a more interactive experience for a user of a hand-held gaming device. *Id.* Because of the significant differences between the structure corresponding to the offset presetting means in the '664 patent and the 3DS, Tomita fails the substantial difference test.

Since Tomita fails both the function-way-result and substantial differences tests, it has failed to show that the 3DS infringes on the '664 patent under a means-plus-function structural equivalence theory or under the doctrine of equivalents. Accordingly, plaintiffs' claim must be dismissed. Concomitantly, Nintendo prevails on its counterclaim for declaratory judgment that the 3DS does not infringe the '664 patent.

The Court also considers Nintendo's request for attorneys' fees under 35 U.S.C. § 285. To determine whether to award fees under § 285, a court first asks whether the case is exceptional and second asks whether an award is appropriate. *See Forest Labs., Inc. v. Abbott Labs.,* 339 F.3d 1324, 1327–28 (Fed.Cir.2003).

F.3d 1374, 1380 (Fed.Cir.2000); *see Odetics,* 185 F.3d at 1268. The key point is not that frame memory 50 finds no exact counterpart in the 3DS. Instead, considering the full context of the invention, the key point is that the '664 patent holds an entire, interleaved stereoscopic image in memory, while the 3DS does not and outputs an image visible to the human eye.

> Exceptional cases usually feature some material, inappropriate conduct related to the matter in litigation, such as willful infringement, fraud or inequitable conduct in procuring the patent, misconduct during litigation, vexatious or unjustified litigation, conduct that violates Federal Rule of Civil Procedure 11, or like infractions. Absent misconduct in the litigation or in securing the patent, a trial court may only sanction the patentee if both the litigation is brought in subjective bad faith and the litigation is objectively baseless.

Serio–US Indus., Inc. v. Plastic Recovery Techs. Corp., 459 F.3d 1311, 1321–22 (Fed.Cir.2006) (citations omitted). This case is not exceptional. Neither party has engaged in inappropriate conduct, and the litigation was neither brought in bad faith nor was it objectively baseless. As such, the Court denies Nintendo's request for attorneys' fees under § 285.

The Clerk is directed to enter final judgment dismissing plaintiff's claim and declaring that the 3DS does not infringe on Claim 1 of the '664 patent.

SO ORDERED.

APPENDIX D — OPINION OF THE UNITED STATES COURT OF APPEALS, FEDERAL CIRCUIT, DATED DECEMBER 8, 2014

UNITED STATES COURT OF APPEALS
FEDERAL CIRCUIT

No. 2014–1244.

TOMITA TECHNOLOGIES USA, LLC,
AND TOMITA TECHNOLOGIES
INTERNATIONAL, INC.,

Plaintiffs-Appellees,

v.

NINTENDO CO., LTD. AND
NINTENDO OF AMERICA, INC.,

Defendants-Appellants.

Dec. 8, 2014

Appeal from the United States District Court for the Southern District of New York in No. 1:11–CV–04256, Judge Jed S. Rakoff.

Before PROST, Chief Judge, BRYSON and HUGHES, Circuit Judges.

OPINION

PROST, Chief Judge.

Nintendo Co., Ltd. and Nintendo of America, Inc. ("Nintendo") appeal from a final judgment of the U.S. District Court for the Southern District of New York, in which a jury found that Nintendo infringed claim 1 of U.S. Patent No. 7,417,664 ("'664 patent"). The jury further found that the infringed claim was not invalid and awarded damages to plaintiffs-appellees Tomita Technologies USA, LLC and Tomita Technologies International, Inc. ("Tomita").

For the reasons that follow, we affirm the district court's denial of a motion for judgment as a matter of law ("JMOL") on the infringement of the "cross-point measuring means" claim element and the validity of the asserted claim. We also affirm the district court's denial of Nintendo's motion for a new trial based on jury instructions relating to "cross-point," "cross-point information," and "cross-point measuring means." However, we reverse the district court's construction of the "offset presetting means" claim element. We remand for further proceedings to determine whether the accused instrumentalities infringe the '664 patent under the correct claim construction.

BACKGROUND

I. Patent

A three-dimensional or 3D movie is typically captured with two cameras providing slightly different images

known as stereoscopic images. A viewer perceives a 3D effect when each eye separately views a stereoscopic image intended for that eye. The strength of the 3D effect varies with the viewing conditions. For example, stretching the images to fit a display that is too large may cause viewer discomfort. The '664 patent aims to address problems relating to the strength of the 3D effect, which the patent refers to as stereoscopic feelings. '664 patent col. 2 ll. 11–24, col. 2 l. 65–col. 3 l. 2.

The '664 patent describes the adjustment of stereoscopic feelings during playback by initially recording the "cross-point information" at the same time the cameras capture the stereoscopic images. *Id.* at col. 2 ll. 1–6. The cross-point is where the optical axes of the two stereoscopic cameras intersect. *Id.* at col. 1 ll. 27–31. In turn, an "offset presetting means" uses "cross-point information" and conditions relating to the playback to provide viewers with the appropriate stereoscopic feelings. *Id.* at col. 9 ll. 3–10. Specifically, the '664 patent describes circuit components adjusting the relative timing between the left-eye and right-eye video images "to provide optimal stereoscopic feeling." *Id.* at col. 10 ll. 16–20. The '664 patent explains that adjusting the relative timing between the left-eye and right-eye video images shifts their relative positions when they are displayed. *Id.* at col. 11 ll. 26–59.

II. District Court Proceedings

Tomita accuses Nintendo's 3DS gaming system along with its camera application and augmented reality ("AR")

game card application of infringing the '664 patent. The 3DS has a 3D-capable top display, 3D-capable outer cameras and a "3D Depth Slider" to adjust the depth of 3D images.

The district court construed both "offset presetting means" and "cross-point measuring means" as means-plus-function elements and adopted Tomita's proposed constructions. On March 13, 2013, the jury returned a verdict for Tomita finding that the 3DS infringed claim 1 of the patent and that claim 1 is not invalid. On April 11, 2013, Nintendo filed a motion for JMOL or a new trial on liability, which the district court denied on August 14, 2013.

Nintendo now appeals the denial of its post-trial motion for JMOL or a new trial. This court has jurisdiction under 28 U.S.C. § 1295(a)(1).

DISCUSSION

I. Claim Construction

Claim construction is a question of law that we review de novo. *Lighting Ballast Control LLC v. Philips Elecs. N. Am. Corp.,* 744 F.3d 1272, 1276–77 (Fed.Cir.2014) (en banc).

[1] The district court construed the function of "offset presetting means" as "offsetting and displaying said different video images based upon said video image information, said cross-point information and information

on the size of the image which is displayed by said stereoscopic video image display device." *Tomita Techs. USA, LLC v. Nintendo Co., Ltd.,* 855 F.Supp.2d 33, 42 (S.D.N.Y.2012). The district court then adopted Tomita's proposal for the corresponding structure, which is:

> The structure is comprised of a circuit and a manual entry unit that sets the offset between the right and left eye images. The '664 patent describes various embodiments of this structure in Figures One and Two, which identify it as number 106, Figures Two and Three, which refer to manual entry of information, Figures Four through Eight, and at 3:24–29, 3:39–44, 4:14–19, 4:63–67, 5:21–24; 5:35–37, 5:63–67, 9:3–10, 11:12–12:52, 15:50–67, 16:9–10, 16:15–16, 17:58–63, 18:6–11, 18:49–54, 19:31–35, 19:56–59, and 20:3–5. The structure also includes equivalents of the structures described above.

J.A. 96–97.

The only dispute here is the identification in the specification of the structure of "offset presetting means" corresponding to the claim function under 35 U.S.C. § 112(f). Our review is not an easy task. Tomita's proposed construction says that "various embodiments" of the structure can be found in lengthy citations to the specification. It is unclear what the structure is for a particular embodiment and where in the specification that structure is described. At oral argument, Tomita clarified

that its theory of the corresponding structure is box 106 in Figure 2 working in the manner described in Figures 7 and 8. Oral Arg. 20:50–21:32, *available* at *http://www.cafc.uscourts.gov/oral-argument-recordings/14–1244/all*. According to Tomita, the corresponding structure shown in Figures 2, 7 and 8 is any "simple circuit" that performs the claim function. Tomita concedes, however, that Figure 3 also shows a corresponding structure for "offset presetting means." *Id.* at 27:49–28:39. To reconcile these two sets of corresponding structures, Tomita contends that they are alternative embodiments.

We first resolve the question of whether the '664 patent discloses multiple embodiments of "offset presetting means" recited in claim 1. The descriptions of Figures 1 to 3 repeatedly refer to "the present embodiment" in explaining how the different aspects relate to one another. '664 patent col. 8 ll. 7–9, 25, 31, 37, 43, 56, col. 9 ll. 11–16. Figures 4 to 8 are further listed as "view[s] showing how the stereoscopic image is viewed by a viewer." *See id.* at col. 7 ll. 23–32. These figures collectively describe the purported invention without any suggestion of different embodiments of "offset presetting means." *See id.* at col. 7 l. 56–col. 10 l. 45, col. 11 l. 12–col. 12 l. 52. Tomita quotes nothing from the descriptions of Figures 2 and 3 that identify those figures as contemplating multiple embodiments of the purported invention.

Instead, Tomita infers "plainly different embodiments" because Figure 3 and its descriptions fail to identify explicitly the components that correspond to box 106 of Figure 2. Appellees' Br. 55–56. This inference fails

upon review of the descriptions of Figures 2 and 3. The descriptions of Figure 2 introduce a larger circuit comprising the "offset presetting means" among other components. '664 patent col. 8 l. 60–col. 9 l. 10. The details of this larger circuit "of the present embodiment" are "shown in FIG. 3." *Id.* at col. 9 ll. 11–16. The '664 patent is clear that Figures 2 and 3 refer to the same embodiment of a larger circuit that comprises the "offset presetting means." Within that same larger circuit referred to in Figures 2 and 3, there is necessarily only a single embodiment of the "offset presetting means."

FIG.2

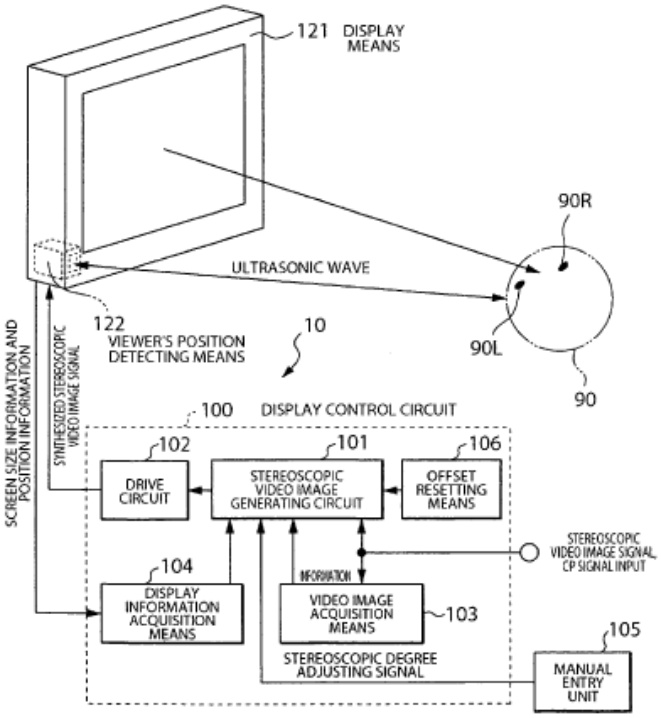

Appendix D

FIG.3

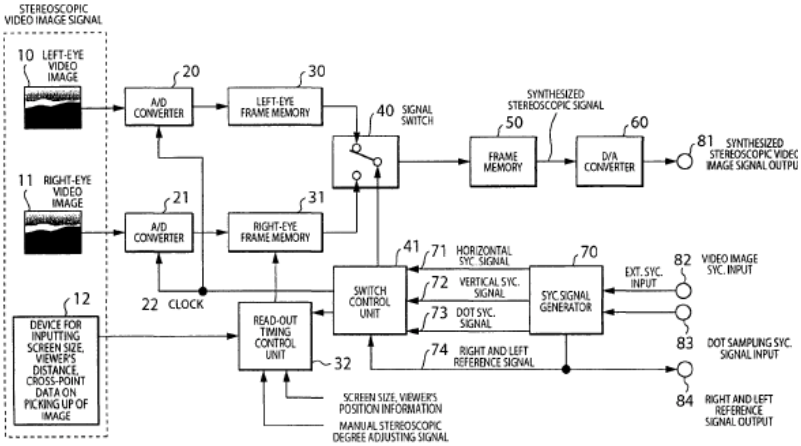

We address next Tomita's contention that Figures 2, 7, and 8 describe the corresponding structure for "offset presetting means." The descriptions of Figure 2 introduce a larger circuit comprising the "offset presetting means" and paraphrase the claim language for the same. *See id.* at col. 8 l. 60–col. 9 l. 10 ("The stereoscopic video image signal generating circuit 101 comprises ... offset presetting means for presetting a [sic] offset value...."). However, repeating or paraphrasing means-plus-function claim language in the specification alone does not describe any structure. *See Ergo Licensing, LLC v. CareFusion 303, Inc.,* 673 F.3d 1361, 1363–64 (Fed.Cir.2012) ("The recitation of 'control device' provides no more structure than the term 'control means' itself, rather it merely replaces the word 'means' with the generic term 'device.' "). Without disclosing any structure of "offset presetting means," the descriptions of Figure 2 fail to provide the corresponding structure for the claim element.

Figures 7, 8 and their descriptions also do not disclose sufficient structural details. The specification uses Figures 7 and 8 to describe "the amount of the offset of the right-eye and left-eye video images." *Id.* at col. 12 ll. 15–16. Calculating the amount of offset provides only functional information for "offsetting" but not its structure. Tomita concedes as much. Appellees' Br. 53 (stating that Figures 4, 7 and 8 describe "[t]he manner in which the system determines the offset"). Even if Figures 7 and 8 were to disclose a structure for the "offsetting" aspect, they do not provide the full structure required by the claim function. The claim function recites "offsetting and displaying." The "displaying" aspect of the claim function is not described at all in Figures 7, 8 and their descriptions. Figures 7, 8 and their descriptions cannot provide sufficient structure that performs the claim function. *See Noah Sys., Inc. v. Intuit Inc.,* 675 F.3d 1302, 1314 (Fed.Cir.2012) (requiring that the corresponding structure "address both aspects of this functional language").

Figures 2, 7, 8 and their descriptions, in fact, do not use "circuit" or any other structural terms in connection with any discussion of "offset." *See* '664 patent col. 8 l. 54–col. 9 l. 10, col. 12 ll. 15–52. Tomita thus does not quote from those descriptions to justify using the word "circuit" in its proposed construction. Instead, Tomita quotes the phrase "simple circuit" from the summary of dependent claim 11. This "simple circuit," in the proper context, refers to:

> said offset presetting means includes timing control means for controlling the timing of the

> readout of video image data from said frame memory for left-eye video image and/or said frame memory for right-eye video image; and said timing control means presets the offset of said left-eye video image and right-eye video image by advancing or delaying the timing of the read-out of the video image data from one of said frame memories for left-eye and right-eye video images relative to the timing of the read-out of the video image data from the other of said from memories for the left-eye and right-eye video images.

Id. at col. 5 ll. 9–20. Tomita omits this detailed structure entirely but quotes "simple circuit" out of context to interpret "offset presetting means" as covering any circuit that performs the claim function. Stripped of the structure in the specification, Tomita's interpretation is no more specific than defining "offset presetting means" in purely functional terms. Such purely functional interpretation is prohibited under 35 U.S.C. § 112(f). *See Med. Instrumentation & Diagnostics Corp. v. Elekta AB,* 344 F.3d 1205, 1211 (Fed.Cir.2003).

Tomita further contends that Figures 2, 7, 8 and their descriptions show structure because its expert says so. However, expert testimony cannot gloss over the total absence of structure in the cited portion of the specification. *Cf. Default Proof Credit Card v. Home Depot USA,* 412 F.3d 1291, 1302 (Fed.Cir.2005) ("[T]he testimony of one of ordinary skill in the art cannot supplant the total absence of structure from the specification."). The lack of

structure for "offset presetting means" in Figures 2, 7, 8 and their descriptions cannot be cured by the Tomita expert's conclusory statements to the contrary.

Finally, we identify the corresponding structure for "offset presetting means." The parties agree that Figure 3 and its descriptions contain the corresponding structure. Oral Arg. at 27:49–28:39. In particular, "timing control unit 32" in Figure 3 operates to "provide optimal stereoscopic feeling" based on "CP information 12" and "screen size information" among others. *Id.* at col. 10 ll. 3–20. "[T]iming control unit 32" thus performs the "offsetting" portion of the claim function. Tomita, in fact, concedes that in Figure 3, it would "identify primarily box 32" as the "offset presetting means." Oral Arg. 28:18–39. The "displaying" portion of the claim function is performed by "the switch control unit 41 preset[ting] the timing of switching of the signal switch 40 for writing of video data into synthesis frame memory 50." '664 patent col. 10 ll. 26–29.

Accordingly, we reverse the district court's adoption of Tomita's proposed corresponding structure for "offset presetting means." The correct corresponding structure should be: timing control unit 32, signal switch 40, switch control unit 41, and synthesis frame memory 50 described in Figure 3 and column 9 line 44 to column 10 line 29 and equivalents thereof.[1]

---

1. We depart from Nintendo's proposed construction because it includes components that do not actually perform the claim function. *See Asyst Techs., Inc. v. Empak, Inc.,* 268 F.3d 1364, 1371 (Fed. Cir.2001) ("The corresponding structure to a function set forth in

II. JMOL of Non–Infringement and Invalidity

We review a denial of a motion for judgment as a matter of law ("JMOL") under regional circuit law. *Lazare Kaplan Int'l, Inc. v. Photoscribe Techs., Inc.,* 628 F.3d 1359, 1366 (Fed.Cir.2010). The Second Circuit reviews a denial of JMOL de novo. *Whitserve, LLC v. Computer Packages, Inc.,* 694 F.3d 10, 18 (Fed.Cir.2012) (citing *AMW Materials Testing, Inc. v. Town of Babylon,* 584 F.3d 436, 456 (2d Cir.2009)). In the Second Circuit, a district court may set aside the jury's verdict and enter judgment as a matter of law pursuant to Rule 50 only where there is "such a complete absence of evidence supporting the verdict ... or there is such an overwhelming amount of evidence in favor of the movant." *AMW Materials Testing,* 584 F.3d at 456. This requirement is similar to the substantial evidence standard. *Whitserve,* 694 F.3d at 18.

A. Non-infringement

1. "offset presetting means"

Nintendo argues that the judgment of infringement should be reversed because Tomita has not proved that the 3DS satisfies this claim element under the correct construction. Tomita argues that if the district court's construction is reversed, Tomita should be given the opportunity to show infringement under any new construction of this claim element.

---

a means-plus-function limitation must actually perform the recited function, not merely enable the pertinent structure to operate as intended...."). We also decline to adopt Tomita's inclusion of a "manual entry unit" for the same reason.

We have now construed this claim element. *See supra* at 663. Because the jury was not presented with the question whether the 3DS infringes the '664 patent under the correct construction, we remand for further proceedings to determine whether the 3DS infringes "offset presetting means."

2. "cross-point measuring means"

[2] Nintendo argues that the 3DS cannot satisfy the function of this claim element because of the following syllogism: camera bodies arranged in parallel have parallel optical axes that can never intersect to have a "cross-point"; the camera bodies of the 3DS are arranged in parallel; so, the 3DS has parallel optical axes that do not have a "cross-point." Nintendo thus insists that the 3DS cannot measure "cross-point information." Nintendo contends instead that the accused software application uses image processing, which cannot provide "cross-point information."

We cannot agree with Nintendo. The major premise of Nintendo's syllogism was disproved by Tomita's submission of a 1993 technical paper. That paper shows cameras arranged in parallel can have intersecting optical axes under particular optical configurations. Indeed, claim 8—dependent from claim 1—explicitly claims cameras "disposed in a parallel relationship." Parent claim 1 cannot exclude the scope of dependent claim 8. *See* 35 U.S.C. § 112(d) (["A] claim in dependent form shall contain a reference to a claim previously set forth and then specify a further limitation of the subject matter claimed."). Claim 1

thus cannot be read to exclude cameras that are arranged in parallel. What is important is that the optical axes of the accused cameras intersect, and Tomita presented a theory of how that is so which the jury apparently credited.

Moreover, Nintendo does not dispute that Tomita presented evidence to support the allegation that the "focus value" in the 3DS satisfies "cross-point information." Instead, Nintendo argues that Tomita failed to prove certain factual issues under Nintendo's own interpretation. *See, e.g.*, Reply Br. 12 ("Tomita provides no evidence showing how the 'focus value' ... is used to determine any distance relating to a cross-point of optical axes, as opposed to the convergence of displayed images."). Failure to abide by Nintendo's own interpretation of facts does not mean that there was a complete absence of evidence supporting the verdict.

Nintendo next contends that the 3DS does not satisfy the "cross-point measuring means" because the 3DS does not have the corresponding structure that uses any of the three techniques purportedly required by the district court's construction. Instead, Tomita's infringement theory was based on a fourth technique "based upon the position of picking up of an object." Nintendo contends that this "fourth technique" was outside of the district court's construction. Nintendo also disputes that the 3DS uses this "fourth technique" because "the 3DS does not recognize objects in images." Appellants' Br. 44–47.

Nintendo is mistaken. The district court's construction includes the description in column 3 lines 50–67 of the '664

patent.[2] This cited portion of the specification mentions "said cross-point measuring means calculates the cross-point based upon the position of picking-up of an object." '664 patent col. 3 ll. 64–66. Calculating the cross-point "based upon the position of picking up of an object" is what Nintendo refers to as the "fourth technique" and it is included in the district court's construction. Moreover, Nintendo does not rebut Tomita's citation of evidence—including source code documentation, patent application, and Tomita's expert testimony—used to show that the 3DS measures "focus value" based on objects in the scene thus allegedly satisfying the technique of "calculat[ing] the cross-point based upon the position of picking-up of an object."

Accordingly, we conclude that the jury's finding that the 3DS satisfies the "cross-point measuring means" was supported by substantial evidence. We therefore affirm the district court's denial of JMOL on the infringement of "cross-point measuring means."

B. Invalidity

[3] Nintendo contends that the '664 patent lacks enablement "[t]o the extent claim 1 includes a device with cameras having parallel optical axes" and lacks adequate written description "[t]o the extent claim 1 of the '664 patent is construed to cover pick-up means having parallel optical axes as in the 3DS." Appellants' Br. 54–59.

---

2. Nintendo does not appeal the construction of "cross-point measuring means." We thus assume this construction without passing judgment on its correctness.

These invalidity contentions are the reverse of Nintendo's non-infringement theory based on "cross-point measuring means," namely that the cameras of the 3DS have parallel optical axes that can never intersect to have a "cross-point." *See supra* at 664–65. Reasoning in reverse, Nintendo infers that finding the 3DS to infringe requires interpreting claim 1 to encompass cameras with parallel optical axes. This is not what Tomita presented in its infringement theory. Instead, as discussed above in section II.A.2, Tomita contended that although the cameras of the 3DS are disposed in parallel, they have intersecting optical axes.

Nintendo has not shown that the infringement verdict must have rested on an incorrect assumption by the jury that claim 1 encompasses cameras with parallel optical axes thus rending the claim invalid. Accordingly, the district court did not err in denying Nintendo's JMOL motion with respect to invalidity.

III. Motion for a New Trial

[4] We review a denial of a motion for a new trial under regional circuit law. *Lazare Kaplan,* 628 F.3d at 1366. The Second Circuit reviews the denial of a motion for new trial for abuse of discretion. *Id.* (citing *SEC v. DiBella,* 587 F.3d 553, 563 (2d Cir.2009)). In the Second Circuit, "[a] motion for a new trial ordinarily should not be granted unless the trial court is convinced that the jury has reached a seriously erroneous result or that the verdict is a miscarriage of justice." *Armstrong v. Brookdale Univ. Hosp. & Med. Ctr.,* 425 F.3d 126, 133 (2d Cir.2005).

Nintendo argues that a new trial is warranted because the district court failed to properly instruct the jury on claim construction. Specifically, Nintendo complains that the improper jury instruction allowed Tomita to prove infringement that departs from the district court's claim construction of "cross-point measuring means."

Nintendo's contentions are again misplaced. The district court's instructions made clear to the jury that it is not free to apply its own reading of disputed terms to the facts of the case. The district court is not required to use rigid, legal language to instruct the jury. The district court has the discretion to determine "the particular form and precise nature of jury instructions." *Sulzer Textil AG v. Picanol N.V.,* 358 F.3d 1356, 1366 (Fed.Cir.2004). Moreover, we have previously disposed of Nintendo's argument that Tomita departed from the district court's claim construction of "cross-point measuring means" in section II.A.2. *See supra* at 665–66. Nintendo has thus failed to establish prejudice flowing from the alleged error in the district court's jury instructions.

Finally, Nintendo argues that a new trial is warranted because the district court declined to construe "cross-point," allowing Tomita to confuse the jury by conflating the claim terms "cross-point" and "cross-point information" with "offset."

We are not persuaded. The '664 patent is clear in its use of "cross-point" and further equates it with "convergence point." '664 patent at col. 1 l. 28. At least "convergence point" had an ordinary meaning to a skilled

person. *See* J.A. 9601. Tomita's discussions of "cross-point" did not differ with how it was used in the '664 patent. Moreover, Nintendo fails to rebut Tomita's response that it distinguished the two offsets allegedly determined by the 3DS—one corresponding to focus value and "cross-point information," and the other one corresponding to the "offset" for displaying in the '664 patent. *Compare* Appellees' Br. 65–66 *with* Reply Br. 29–33 (focusing on Tomita's alleged departure from the district court's construction of "cross-point measuring means").

Nintendo has failed to show that the district court abused its discretion in denying Nintendo's motion for a new trial. Accordingly, we affirm the district court's denial of Nintendo's motion for a new trial based on jury instructions relating to "cross-point," "cross-point information" and "cross-point measuring means."

AFFIRMED–IN–PART, REVERSED–IN–PART, VACATED–IN–PART AND REMANDED

COSTS

Each party shall bear its own costs.

APPENDIX E — MEMORANDUM ORDER OF THE UNITED STATES DISTRICT COURT FOR THE SOUTHERN DISTRICT OF NEW YORK, DATED AUGUST 14, 2013

UNITED STATES DISTRICT COURT
SOUTHERN DISTRICT OF NEW YORK

No. 11 Civ. 4256(JSR)

TOMITA TECHNOLOGIES USA, LLC; TOMITA TECHNOLOGIES INTERNATIONAL, INC.,

Plaintiffs,

-v-

NINTENDO CO., LTD.;
NINTENDO OF AMERICA INC.,

Defendants.

August 13, 2013, Decided
August 14, 2013, Filed

MEMORANDUM ORDER

JED S. RAKOFF, U.S.D.J.

Beginning on February 25, 2013, the Court conducted a jury trial on claims by Tomita Technologies USA, LLC and Tomita Technologies International (collectively, "Tomita") that the Nintendo 3DS, a handheld gaming console created and sold by Nintendo Co., Ltd., and

Nintendo of America, Inc. (collectively, "Nintendo"), infringed U.S. Patent No. 7,417,664 (the "'664 patent"), owned by Tomita. On March 13, 2013, the jury returned a verdict for Tomita in the amount of $30,200,000.00, finding that the 3DS infringed the '664 patent and that the '664 patent was not invalid. The same day, the Court ruled that, as a matter of law, Tomita had failed to prove that Nintendo had willfully infringed the '664 patent by clear and convincing evidence, which it confirmed in a written Memorandum and Order. *See* Memorandum and Order, No. 11 Civ. 4256, ECF No. 128 (S.D.N.Y. Mar. 13, 2013). On March 14, 2013, the Court entered judgment in favor of Tomita. Judgment, No. 11 Civ. 4256, ECF No. 127 (S.D.N.Y. Mar. 14, 2013).

On April 11, 2013, Nintendo filed motions seeking judgment as a matter of law or a new trial as to liability, or, alternatively, remittitur or a new trial as to damages. Tomita, for its part, filed a motion to alter or amend the judgment under Rule 59 with respect to a number of issues related to its damages award and ongoing royalty payments. For the following reasons, the Court grants Nintendo's motion for remittitur or a new trial on damages; grants Tomita's motions in part; but otherwise denies the motions.

At the outset, a brief summary of the relevant technologies is in order. The '664 patent is a patent relating to stereoscopic (or 3D) imaging technology and includes four major elements: (1) "a stereoscopic video image pick-up device" (*i.e.*, two cameras), (2) a "stereoscopic video image display," (3) a "cross-point measuring means for

measuring [cross-point] information on the cross-point (CP) of optical axes," and (4) an "offset presetting means for offsetting and displaying said different video images." U.S. Patent No. 7,417,664 col. 2, 1.44-65. Tomita claims that Nintendo uses the '664 patent's technology in the 3DS's two outer cameras. Thus, only the 3DS's camera application (which allows the user to take and view 3D photos and videos) and the augmented reality ("AR") game card application (which allows some games to be superimposed over real-world images captured by the 3DS's cameras) are at issue. The 3DS's other applications, including its 3D display, do not rely on the '664 patent.[1]

In its motion for judgment as a matter of law, Nintendo—reiterating many of the arguments it unsuccessfully advanced prior to and/or during trial—argues that it is entitled to judgment as a matter of law for the following reasons: (1) the testimony of John Merritt, Tomita's infringement and validity expert, was conclusory and unreliable and therefore was insufficient to support the jury's verdict; (2) Tomita failed to prove that the 3DS infringes claim 1 of the '664 patent; (3) Tomita failed to show that Nintendo induced infringement; and (4) clear and convincing evidence established that the '664 patent was invalid.

---

1. Although prior to trial, Tomita had taken the position that the 3DS infringed upon claim 1 of the '664 patent (the patent's only independent claim) and also upon various dependent claims that were, in effect, variations on claim 1, nonetheless, since a finding of infringement as to any dependent claim would require a finding that claim 1 was also infringed, Tomita consented to a jury instruction to make findings regarding infringement only as to claim 1.

"Judgment as a matter of law is appropriate when 'a party has been fully heard on an issue' and 'a reasonable jury would not have a legally sufficient evidentiary basis to find for the party on that issue.'" *Caceres v. Port Auth. of New York & New Jersey*, 631 F.3d 620, 622 (2d Cir. 2011) (quoting Fed. R. Civ. P. 50(a)(1)). In deciding such a motion, a court must "consider the evidence in the light most favorable to the party against whom the motion was made" and "give that party the benefit of all reasonable inferences that the jury might have drawn in his favor from the evidence." *Id.* (quoting *Tolbert v. Queens Coll.*, 242 F.3d 58, 70 (2d Cir. 2001)). Thus, "[u]nder Rule 50(b), a jury verdict should be set aside only where there is such a complete absence of evidence supporting the verdict that the jury's findings could only have been the result of sheer surmise and conjecture, or . . . such an overwhelming amount of evidence in favor of the movant that reasonable and fair minded men could not arrive at a verdict against him." *Rafter v. Bank of Am.*, No. 04 Civ. 3341, 2011 U.S. Dist. LEXIS 133041, 2011 WL 5579029, at *1 (S.D.N.Y. Nov. 15, 2011), *aff'd*, 523 Fed. Appx. 79, 2013 U.S. App. LEXIS 7536, 2013 WL 1595116 (2d Cir. Apr. 16, 2013). Against this demanding standard, the Court turns to each of Nintendo's four arguments.

Nintendo first argues that Tomita's evidence at trial regarding whether the 3DS infringes on the '664 patent consisted entirely of the conclusory and unreliable testimony of Tomita's infringement expert, Mr. John Merritt, such that judgment as a matter of law should be granted in Nintendo's favor, or, alternatively, a new trial should be granted. As Nintendo asserted in its motion

in limine—which the Court denied prior to trial—Mr. Merritt cannot read the C++ programming language in which the 3DS's source code is written, *see* Trial Transcript ("Tr.") 364:22-365:8, understanding of which, Nintendo claims, is critical to the issue of infringement because the 3DS's software dictates how the 3DS's 3D camera and AR games features function. Because he could not read the source code, Mr. Merritt relied on the analysis of Ken Amron, a forensic software consultant hired by Tomita who did not testify at trial. Tr. 362:4-7, 436:22-24. In this way, Nintendo argues that Merritt merely parroted Mr. Amron's conclusions, rendering Merritt's opinions unreliable. Additionally, because Mr. Merritt could not read the source code, Nintendo claims that Mr. Merritt's opinion consisted merely of cursory observations as an ordinary user of the 3DS, which Nintendo claims cannot provide a sufficient basis for expert analysis as to how the 3D camera and AR games features actually function. Nintendo claims that such conclusory testimony is insufficient to sustain a finding of infringement.

However, Mr. Merritt's observations of the 3DS extended far beyond merely "cursory observations as an ordinary user." Mr. Merritt reviewed documentation for the 3DS, internal Nintendo documents, and deposition testimony of Nintendo engineers—in addition to his own testing of the 3DS and Mr. Amron's translation of the source code, *see* Tr. 257:3-285:14—and applied to that information his extensive experience in stereoscopic imaging so as to arrive at his expert opinion with respect to the operation of the 3DS. *See Medisim Ltd. v. BestMed LLC*, 861 F. Supp. 2d 158, 169 (S.D.N.Y. 2012) ("Where a

testifying expert has expertise in the field covered by a consulting expert and independently verifies the latter's conclusions, there is no danger that the former is acting as a mere 'mouthpiece or conduit' of the latter."). Moreover, Nintendo devoted a substantial portion of its closing arguments to Mr. Amron's absence, so the jury was free to consider that alleged insufficiency in addressing the credibility of Mr. Merritt's testimony. *See Arista Records LLC v. Lime Group LLC*, No. 06 Civ. 5936, 2011 U.S. Dist. LEXIS 47416, 2011 WL 1674796, at *3 (S.D.N.Y. May 2, 2011) ("[C]laims that the assumptions relied on by an expert are unfounded is generally an argument that goes to the weight rather than the admissibility of the evidence.").

What is more, the actual operation of the 3DS source code was relatively undisputed, as Mr. Merritt conceded that the 3DS's 3D camera and AR games applications operated largely as Nintendo claimed. *See* Tr. 414:25-415:2, 420:18-22. Rather, the central issue at trial was whether those methods were in fact merely methods of employing the '664 patent's technology or were in some meaningful way a different technology. Whether Mr. Merritt could read the source code had little bearing on that issue. Based on the totality of the evidence presented at trial, including testimony from Nintendo's own expert witness, Dr. Jan-Michael Frahm, the jury resolved this central question in favor of Tomita, and the Court sees no reason to overturn that determination at this juncture. Thus, the Court denies Nintendo's motion for judgment as a matter of law and motion for a new trial to the extent it is based on a challenge to the reliability of Mr. Merritt's expert testimony.

Nintendo's second argument for judgment as a matter of law—that Tomita failed to prove that the 3DS infringed the '664 patent either literally or under the doctrine of equivalents—encompasses various issues related to each of the '664 patent's key features: whether Tomita identified at trial any structure in the 3DS that is identical or equivalent to the corresponding "cross-point measuring means" in the '664 patent and that performs the identical function; whether Tomita proved by sufficient evidence that the 3DS performs the function of "measuring [cross-point] information on the cross-point (CP) of optical axes" of its outer cameras; whether Tomita demonstrated that the 3DS performs offsetting based upon "cross-point information" and "information on the size of the image," as required to perform the function of the '664 patent's "offset presetting means"; and whether Tomita showed that the 3DS uses a preset value that serves as the baseline for calculating the claimed offset to perform the function of the "offset presetting means."

At the heart of Nintendo's motion is its claim that the evidence at trial unequivocally showed that the 3DS's two outer cameras are configured such that their optical axes remain parallel. From this follows the notion that, because the axes are parallel, they never intersect, and so the 3DS never determines a cross-point. Rather, Nintendo claims, the evidence at trial showed that the 3DS's 3D camera feature determines an "offset" based on the brightness of the individual pixels that make up the two camera's images, not based on distance information, and therefore does not rely on cross-point information. Similarly, Nintendo claims that, with respect to the AR

games feature, the evidence showed that the distance to the AR card is estimated using only a single camera, which cannot create a cross-point on its own, and that the AR games application relies upon the shape and size of the AR card to determine if it is the proper distance away, and does not use any cross-point information.

However, the evidence at trial, viewed as it must be on Nintendo's motion most favorably to Tomita, established that the 3DS camera application operates through a combination of the operations of the 3DS's "System on a Chip," other circuits in the 3DS, and the 3DS's circle pad and touch screen. *See* Tr. 326:7-327:12, 330:19-331:2. In this system, "cross-point information" is measured at the time an image is captured in the form of the offset. The offset is determined by selecting a subset of the image captured by the software chips, and this information is used to determine the angle of intersection of the cameras' optical axes, or the location of the cross-point. Explained another way, the optical axes may be set by selecting outer or inner subsets of the left and right images as captured by the cameras' chips, which moves the cross-point closer or farther away, respectively. *See, e.g.*, Tr. 304:2-305:1. This focus value can be determined based on user input from the circle pad or touch screen, or automatically based on the position of objects picked up by the 3DS's cameras, satisfying the alternative methodologies outlined in the patent. Thus, the evidence supported the jury's finding that, whereas the cameras themselves may be parallel, the optical axes are not.

Turning to the two uses of the '664 patent in the 3DS, the evidence, again taken in the light most favorable to Tomita, supported Tomita's claim that the 3D camera application uses two different offsets: the first is the offset or focus value, described above, which constitutes cross-point information that is stored with the left and right images, *see* Tr. 293:2-5; the second is the offset that the 3DS's software determines (by its offset presetting means) when displaying images, based on the focus value (cross-point information) and information on the size of the image that is displayed, *see*, Tr. 293:2-15. Although the 3DS's screen is measured only in pixel information, which does not inherently relate to physical size, documentation for the 3DS demonstrates that there was a known correlation in the context of the 3DS between the 3DS's pixel information and the physical size of the screen. In the AR games application, the 3DS determines the "focus value" using the location of the AR game card, which is then used to determine the cross-point based on that location. *See, e.g.*, Tr. 319:14-321:10. Thus, even if the distance to the game card is measured only by one camera, the distance information, under Tomita's theory, is not the cross-point itself, but is merely used to determine the cross-point.

Although individual moments of Mr. Merritt's testimony may have been less than illuminating, as a whole Mr. Merritt presented a coherent vision of how the 3DS's operations meet each requirement of claim 1 of the '664 patent. While Nintendo's motion papers refer to comments by Mr. Merritt that were, out of context, conclusory, the papers ignore other testimony by Mr. Merritt that provided more factual detail. Overall, the

Court finds, there was substantial evidence to support the jury's finding as to each of the claim limitations of claim 1 of the '664 patent.

Nintendo's third argument for judgment as a matter of law, respecting Tomita's claim for induced infringement, is curious, since, at trial, Tomita abandoned this claim, both by not pressing it and by not objecting to the omission of any jury instruction on this claim. Since, therefore, the claim was not presented to the jury, this prong of Nintendo's motion is moot.

Nintendo's final argument for judgment as a matter of law is that no reasonable jury could find that claim 1 of the '664 patent is valid, because, Nintendo claims, clear and convincing evidence showed both that the patent is not enabled and that it was anticipated by the prior art. Nintendo argues that claim 1 is not enabled where the two cameras are configured to have parallel optical axes, as Nintendo claims is present in the 3DS, because no reasonable jury could find that the patent teaches how to practice such an embodiment without undue experimentation. However, as discussed above, it is clear that the jury rejected Nintendo's claim that the optical axes of the 3DS's cameras are parallel; thus, whether claim 1 is enabled in such a configuration is completely irrelevant, and Nintendo's motion with respect to enablement is denied.

As to whether claim 1 of the '664 patent was anticipated by the prior art, Nintendo claims that the "Matsugu '408" patent is a preexisting patent that disclosed each and every

element of claim 1. *See Atlas Powder Co. v. Ireco, Inc.*, 190 F.3d 1342, 1346 (Fed. Cir. 1999) ("To anticipate a claim, a prior art reference must disclose every limitation of the claimed invention, either explicitly or inherently." (internal quotation marks omitted)). At trial, the parties' experts disputed whether the Matsugu '408 patent anticipated the '664 patent with respect to three elements: whether the "per pixel parallel adjustment" of the Matsugu '408 patent is meaningfully different from the offsetting of the '664 patent, *see* Tr. 971:5-972:12, 837:7-17; whether "the size of the displayed image" was "an input to the process" in the Matsugu '408 patent; and, finally, whether the Matsugu '408 patent lacks a manual entry unit corresponding to the offset-presetting means, as required by the '664 patent, *see* Tr. 768:17-769:18, 840:3-842:20, 971:9-973:9. The burden was on Nintendo to prove by clear and convincing evidence that claim 1 of the '664 patent was anticipated by the Masugu '408 patent, and the jury concluded that Nintendo had not met this burden.

On this motion, therefore, Nintendo bears the burden of proving that the jury's resolution of this dispute between experts was unreasonable as a matter of law. Yet the jury was fully entitled to credit Mr. Merritt's testimony rather than Dr. Frahm's, as Mr. Merritt's testimony revealed a thorough understanding of the Matsugu patent and clearly explained the elements missing from the Matsugu '408 patent. *See* 976:14-977:1. In short, there was substantial evidence in the record to support the jury's finding that the '664 patent was not anticipated by the Matsugu '408 patent.

For the foregoing reasons, the Court hereby denies Nintendo's motion for judgment as a matter of law. Nintendo next moves for a new trial as to liability. "Unlike a motion for judgment as a matter of law, a motion for a new trial may be granted even if there is substantial evidence to support the jury's verdict." *Caruolo v. John Crane, Inc.*, 226 F.3d 46, 54 (2d Cir. 2000) (internal quotation marks omitted). However, even though the standard is less stringent than a motion for judgment as a matter of law, "[a] motion for a new trial ordinarily should not be granted unless the trial court is convinced that the jury has reached a seriously erroneous result or that the verdict is a miscarriage of justice." *Id.* (internal quotation marks omitted). And, once again, the Court is obligated to "view the evidence in the light most favorable to the nonmoving party." *Id.*

Nintendo argues that a new trial is required because the parties' claim-construction disputes were not resolved prior to submission of the case to the jury, and because the jury was not instructed on the Court's claim construction. As to the first issue, the Court, in its *Markman* decision, held that the terms "cross-point" and "optical axes" needed no construction and explicitly rejected Nintendo's proposed narrowing constructions in favor of the ordinary meaning of those terms. *See* Memorandum, No. 11 Civ. 4256, 855 F. Supp. 2d 33, ECF No. 64 (S.D.N.Y. Feb. 22, 2012) at 10-11. Despite this, Nintendo argued at trial and continues to contend here that the Court failed to resolve the parties' dispute as to these terms. Nintendo claims that this purported failure allowed Tomita and Mr. Merritt to conflate the terms "offset" and "cross-point"

in ways that misled the jury and to discuss the "optical axes" of the cameras in ways that were inconsistent and confusing.

The Court disagrees with Nintendo's characterization. As an initial matter, the Court once again reaffirms its claim-construction decision, as it did at trial when Nintendo raised this issue. Additionally, the Court rejects Nintendo's claim to have been prejudiced by this purported error, as Tomita's (and Mr. Merritt's) use of the terms "offset" and "cross-point" were proper. These terms were appropriately employed to explain the functioning of the 3DS and the '664 patent to the jury, and their usage reflected the notion that, as discussed above, the 3DS used the focus value or offset to determine the cross-point and then used that information in determining the offset for displaying the image on the 3DS's screen. Similarly, to the extent that Mr. Merritt testified that he did not know every detail of how the 3DS functions, it is perfectly logical that Mr. Merritt would testify to alternative ways in which the 3DS might "tilt" the optical axes of its cameras to form a cross-point. Thus, the Court finds no justification for Nintendo's request for a new trial with respect to its resolution of claim-construction disputes.

As to the second issue, Nintendo argues that where the district court makes "specific claim construction rulings," it is "required to inform the jury that it . . . must apply the district court's construction of the terms in its deliberations," so that the jury is not left "free to make its own determination of the meaning of the claims." *Sulzer Textil A.G. v. Picanol N.V.*, 358 F.3d 1356, 1367 (Fed. Cir.

2004). At trial, the parties presented the Court's claim construction in their closing statements, and there was no dispute presented to the jury regarding the terms of the Court's ruling. As a result, the Court in its instruction to the jury, after explaining that it had already determined the meaning of the claim terms, which the jury was obligated to apply, simply stated that "both sides have already presented these definitions to you, so I will not repeat them here." Tr. 1087:7-18. Since there was no dispute over the claim terms that the jury had to resolve, and since both sides had amply and accurately defined those terms in their closing arguments (as well as at numerous other times throughout the trial), reiterating those definitions in the Court's instructions would only have created confusion. As the Federal Circuit has made clear, there is no error in such a situation in failing to repeat the claim construction to the jury, let alone prejudicial error. *Cf. Sulzer*, 358 F.3d at 1357 (finding no prejudicial error where the court did not instruct the jury as to its claim construction and "[t]he evidence presented at trial reflected the court's claim construction"). Accordingly, Nintendo's motion for a new trial as to liability is denied.

Finally, the Court turns to Nintendo's motion for remittitur or for a new trial on damages. District courts have discretion "to enter a conditional order of remittitur, compelling a plaintiff to choose between reduction of an excessive verdict and a new trial [on damages], 'in at least two distinct kinds of cases: (1) where the court can identify an error that caused the jury to include in the verdict a quantifiable amount that should be stricken, . . . and (2) more generally, where the award is "intrinsically

excessive" in the sense of being greater than the amount a reasonable jury could have awarded, although the surplus cannot be ascribed to a particular, quantifiable error.'" *Kirsch v. Fleet St., Ltd.*, 148 F.3d 149, 165 (2d Cir. 1998) (ellipsis in original) (quoting *Trademark Research Corp. v. Maxwell Online, Inc.*, 995 F.2d 326, 337 (2d Cir. 1993)). For cases in the latter category, a jury's damage award may be set aside as excessive where "the award is so high as to shock the judicial conscience and constitute a denial of justice." *Id.* In that circumstance, a court may reduce the jury's award to "the maximum that would be upheld by the trial court as not excessive." *Trademark Research Corp.*, 995 F.2d at 337.

Nintendo moves for remittitur on the ground that Tomita's damages expert, Mr. Wayne Hoeberlein, used the "entire market value" of the 3DS as the royalty base for calculating the reasonable royalty owed to Tomita, which, according to Nintendo, erroneously allowed the jury to include all revenue from the 3DS in its determination of damages. Nintendo derives this criticism from the rule that, in calculating damages for multi-component products accused of infringement, royalties must "be based not on the entire product, but instead on the 'smallest salable patent-practicing unit.'" *LaserDynamics, Inc. v. Quanta Computer, Inc.*, 694 F.3d 51, 67 (Fed. Cir. 2012) (quoting *Cornell Univ. v. Hewlett-Packard Co.*, 609 F. Supp. 2d 279, 283, 287-88 (N.D.N.Y. 2009)). "The entire market value rule is a narrow exception to this general rule. If it can be shown that the patented feature drives the demand for an entire multi-component product, a patentee may be awarded damages as a percentage of revenues or profits attributable to the entire product." *Id.* at 67.

Whether the entire market value rule is implicated thus turns on the question of whether the 3DS constitutes the "smallest salable patent-practicing unit" in which the '664 patent's technology is utilized. As the Court found in denying Nintendo's motion *in limine* on this issue, Mr. Hoeberlein properly looked to the 3DS itself as the "smallest salable patent-practicing unit," and therefore did not rely on the entire market value rule. Nintendo neither purchases nor sells components of the 3DS that infringe the '664 patent; the individual components cannot practice the patent before they are assembled and programmed with Nintendo's software; and the 3DS is imported to the United States fully assembled. *Cf. LaserDynamics*, 694 F.3d at 68 (finding the entire market value rule violated because optical disk drives, which separately infringed the relevant patent, were sold separately). In these circumstances, the entire market rule was not violated, so it can provide no basis to reject the jury's damages award.

The Court concludes, nonetheless, that the jury's $30.2 million damages award is "intrinsically excessive" and unsupported by the evidence presented at trial. *See Kirsch*, 148 F.3d at 165. An analysis of factors set forth in *Georgia-Pacific Corp. v. U.S. Plywood Corp.*, 318 F. Supp. 1116, 1120 (S.D.N.Y. 1970), which the jury was instructed to employ in determining its damages award, cannot support the very large award the jury reached. Although the jury's award amounted to a royalty rate of just under three percent of the sale price of the 3DS, which is less than that paid to Tomita under the licensing agreement presented to the jury as a "comparable" agreement, there are special circumstances relating to the 3DS that

strongly suggest that such a royalty rate is excessive in this context.

To begin with, the evidence at trial showed that the 3DS console is not itself profitable. *See* Tr. 903:16. Although Tomita's expert testified that Nintendo derives substantial profits from the sale of games designed solely for the 3DS and therefore those profits should be considered in determining the profitability of the 3DS gaming system as a whole, the evidence at trial also established that the vast majority of games designed for the 3DS do not require or even utilize the technology covered by the '664 patent. Tr. 484:17-485:15; 555:23-559:4. Thus, it seems that the jury, in coming to such a substantial damages award, likely weighed too heavily the somewhat unrelated profit that Nintendo earns on games for the 3DS.

Additionally, although the entire market value rule does not apply on the facts of this case, the concerns that motivate the doctrine nonetheless speak to whether the jury's damages award was appropriate. Thus, while there is no smaller patent-practicing unit than the 3DS as a whole, the '664 patent's technology was used only in two features—the 3D camera and the AR games application—and thus was in some sense ancillary to the core functionality of the 3DS as a gaming system. Tr. 905:19-906:12. In addition, the evidence presented at trial showed that consumer reception for the patent-related features was mixed. Tr. 550-552. Based on these factors and the fact that the 3DS is not itself profitable, the Court finds that it surpasses reasonable belief that Nintendo would, in a hypothetical negotiation, agree to a

"reasonable royalty" payment anywhere near as large as that awarded by the jury.

For these reasons, the Court finds that the jury's damages award was at least twice as large as the amount a reasonable jury could have awarded based on the evidence presented at trial and thereby must have involved the degree of excessive speculation that "shocks the judicial conscience." *See Lucent Technologies, Inc. v. Gateway, Inc.*, 580 F.3d 1301, 1335 (Fed. Cir. 2009) (vacating damages award where it appeared the jury's award was "not supported by substantial evidence" and was "based mainly on speculation or guesswork"). Accordingly, the Court hereby gives Tomita the choice between accepting either a remittitur of the damages award from $30.2 million to $15.1 million or undertaking a new trial on damages.

Turning to Tomita's motion to amend the judgment, Tomita seeks the following additions to its now-vacated damages award: (a) damages for sales of infringing 3DS devices occurring before judgment was entered but not included in the jury's verdict; (b) prejudgment interest; (c) post-judgment interest; and (d) ongoing royalties at an enhanced rate. The Court addresses each of these motions to the extent practicable given its determination on Nintendo's motion for remittitur.

The Court grants Tomita's uncontested motion for damages based on sales of infringing 3DS devices not included in the jury's verdict from December 31, 2012 (the latest date for which Nintendo had produced sales data as

of trial) through the entry of judgment on March 14, 2013. *See ActiveVideo Networks, Inc. v. Verizon Commc'ns, Inc.*, No. 2:10CV248, 2011 U.S. Dist. LEXIS 119001, 2011 WL 4899922, at *2 (E.D. Va. Oct. 14, 2011), *aff'd*, 694 F.3d 1312 (Fed. Cir. 2012) ("Where a patent infringer is found to have infringed one or more patents, the patentee is entitled to damages for the entire period of infringement and should therefore be awarded supplemental damages for any periods of infringement not covered by the jury verdict."). However, because the implied royalty rate will change based on whether Tomita accepts remittitur or whether a new damages award is determined at trial, the Court leaves to later briefing the determination of the amount of damages to be awarded.

Tomita next seeks an award of prejudgment interest. Under 35 U.S.C. § 284, "prejudgment interest should ordinarily be awarded" in patent infringement cases, since "[a]n award of interest from the time that the royalty payments would have been received merely serves to make the patent owner whole," given that "his damages consist not only of the value of the royalty payments but also of the forgone use of the money between the time of infringement and the date of the judgment." *General Motors Corp. v. Devex Corp.*, 461 U.S. 648, 655-56, 103 S. Ct. 2058, 76 L. Ed. 2d 211 (1983). "The normal procedure under *Devex* is to award prejudgment interest from the date of infringement to the date of payment." *Bio-Rad Laboratories, Inc. v. Nicolet Instrument Corp.*, 807 F.2d 964, 967 (Fed. Cir. 1986). In determining what amount of interest to award, courts "must be guided by the purpose of prejudgment interest, which is 'to ensure that the patent

owner is placed in as good a position as he would have been had the infringer entered into a reasonable royalty agreement.'" *Id.* (quoting *Devex*, 461 U.S. at 655).

Nintendo does not contest that Tomita is entitled to an award of prejudgment interest from the date of infringement. However, the parties disagree as to the appropriate interest rate to be used in calculating such interest. Tomita argues that the proper interest rate to be applied is the prime rate, which represents the interest rate that a corporate borrower with good credit would pay for a loan, while Nintendo argues that the Court should apply the Treasury Bill rate, which represents the return that an investor would receive on a risk-free investment. Because Tomita fails to suggest that it borrowed money during the infringement period and therefore should be compensated at the higher prime rate, the Court hereby awards prejudgment interest at the Treasury Bill rate. *See Laitram Corp. v. NEC Corp.*, 115 F.3d 947, 955 (Fed. Cir. 1997) (finding no abuse of discretion where the district court awarded interest at the Treasury Bill rate and "found that there was no evidence that [the plaintiff had] borrowed money at a higher rate, what that rate was, or that there was a causal connection between any borrowing and the loss of the use of the money awarded"). However, because, again, the damages award amount is indeterminate at this time pending Tomita's decision on remittitur, the amount of prejudgment interest owed to Tomita cannot be calculated at this time.

Third, Tomita requests that the Court enter an award of post-judgment interest under 28 U.S.C. § 1961. However,

the amount of such an award is yet to be determined, not only because the amount of the judgment is uncertain, but also because an appeal by Nintendo is likely. Thus, while an award of post-judgment interest would be appropriate if the Court's judgment were to be upheld on appeal, such an award would be premature at this time.

Fourth and finally, Tomita seeks ongoing royalties for Nintendo's continued infringement of the '664 patent. Specifically, Tomita seeks an order that: (1) for the period the '664 patent is in force, Nintendo shall pay ongoing royalties on the 3DS; (2) such payments shall be made on a quarterly basis, within thirty days following the end of each quarter, along with a certified report stating the number of sales during such quarter; (3) the order shall be non-assignable, non-transferable, and non-sublicensable; and (4) Nintendo shall mark all covered products covered by the order with "U.S. Patent No. 7,417,664."

While the Court accepts as a general matter that it would be appropriate for Nintendo to pay an ongoing royalty for future sales of the 3DS, it would be nonetheless premature to set an ongoing royalty rate in light of the uncertainty regarding Tomita's damages award and the royalty rate that the award implies. Thus, the Court defers ruling on Tomita's motion until after the issue of remittitur is resolved. However, given that the Court intends to award an ongoing royalty that will fully protect Tomita's interest in the '664 patent, the Court denies Tomita's request that Nintendo mark the 3DS with "U.S. Patent No. 7,417,664."

In sum, the Court denies all of Nintendo's motions except its motion for remittitur. By August 23, 2013, Tomita must inform the Court in writing of its choice whether to accept a $15.1 million damages award or whether to proceed to a new trial on damages. Furthermore, the Court grants Tomita's motion as it relates to damages based on sales of infringing 3DS devices not included in the jury's verdict, prejudgment interest, and ongoing royalty payments, with all amounts to be determined upon resolution of the remittitur issue, and denies the motion for post-judgment interest without prejudice to renewal after any appeal has been decided.

The Clerk of the Court is hereby directed to close items number 149 and 155 on the docket of this case.

SO ORDERED.